Dreams of Fearless Creativity Come True

A project for learning about piecing and quilting with your new Little Rebel machine, refining your skills, and exploring your creativity.

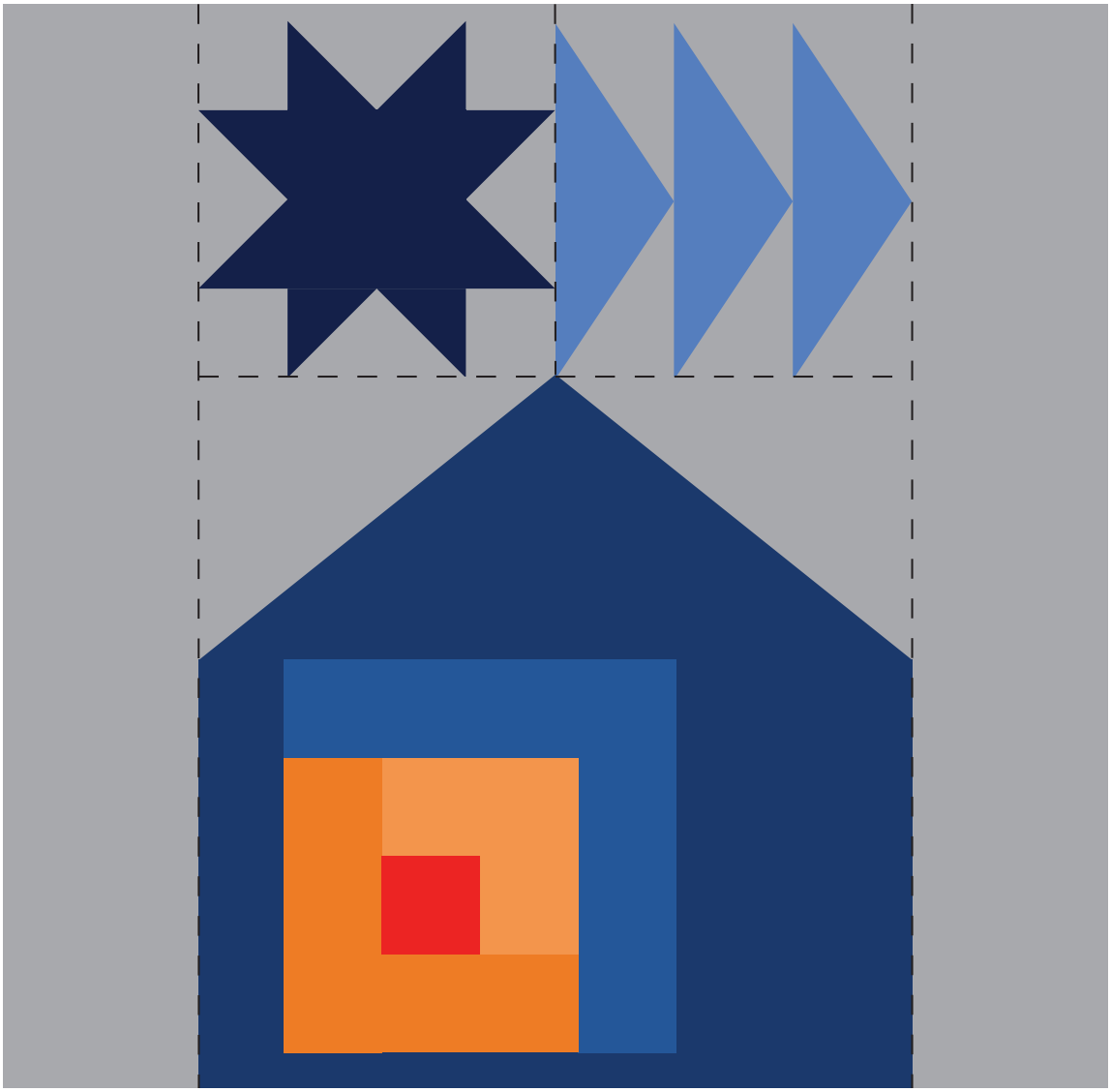

Grace COMPANY

Copyright September 4, 2024

V1.4

CONTENTS

Introduction 4
The Project 4
The Little Rebel 4
The Panel 4
The Supplies 5
Lesson 1: Cutting Your Pieces 6
Lesson 2: Setting Up Sewing Mode 8
Pulling Up The Bobbin Thread (Needle Plate) 11
Lesson 3: Starting the Piecing Process 13
Lesson 4: Pressing the Seams 16
Lesson 5: Finishing Piecing 18
Lesson 6: Making Your Quilt Sandwich 20
Lesson 7: Setting Up Quilting Mode 25
Lesson 8: Quilting Without Regulation 30
Pulling Up The Bobbin Thread (Starting) 31
Pulling Up The Bobbin Thread (Ending) 34
Extra Credit: Should I Tack Down My Quilt Edges? 36
Lesson 9: Quilting (With Regulation) 37
Lesson 10: Finishing Your Project 44
Notes 49

WELCOME TO THE EXCITING WORLD OF HOME-BASED QUILTING!

Whether you're a life-long quilter with a new machine or you're starting a new hobby, Grace Company is here to guide you toward success on your personal quilting journey.

Read these instructions, refer to them often, and soon you'll be confident using your Little Rebel.

Regardless of your quilting experience, you might want to use the included fabric panel to become acquainted with your setup. Using the provided panel lets you master your new equipment worry-free.

Use the notes section to write down important insights or to doodle your quilting designs. You can even write on the panel fabric—remember, this is practice!

Now, go have fun!

Introduction

THE PROJECT

As a quick project to familiarize yourself with the Little Rebel machine, this booklet provides steps for you to make a quilted pillow or wall hanging.

Quilting is the process of creating a textile that has multiple layers. Quilting can also refer to the process of sewing the layers together to reinforce the material and to decorate the item.

To sew your quilt layers, you can either put the fabric on a frame and then move the machine around while your quilt stays still (**frame quilting**), or you can keep your machine on a table and then move the quilt around while your machine stays still (**off-frame quilting**). The Little Rebel can do either option.

For this project, you're going to create (or **piece**) a quilt top from smaller pieces of fabric provided as a panel. Then, you'll use a large piece of fabric (**backing**) and some **batting** to complete the layers (make a **quilt sandwich**). Next, you'll use the off-frame quilting technique to quilt those layers together with some fun designs. Finally, you'll finish off the project by making the pillow or wall hanging.

THE LITTLE REBEL

The Little Rebel has two modes: Sewing and Quilting. Use **Sewing Mode** for straight stitching to piece together your quilt top and to finish your projects. Use **Quilting Mode** for free-motion quilting to stitch the layers of your item together. This booklet will guide you through the process of using the Little Rebel in both modes.

THE PANEL

Your Little Rebel came with a fabric panel for you to practice. The panel is a stand-in for a quilt top, so that you can learn about your new machine.

You can repeat this process as many times as you like with scrap fabric for additional practice and fun. The more you refine your skills, the more your confidence will grow!

Note: Your panel might use different colors than the example.

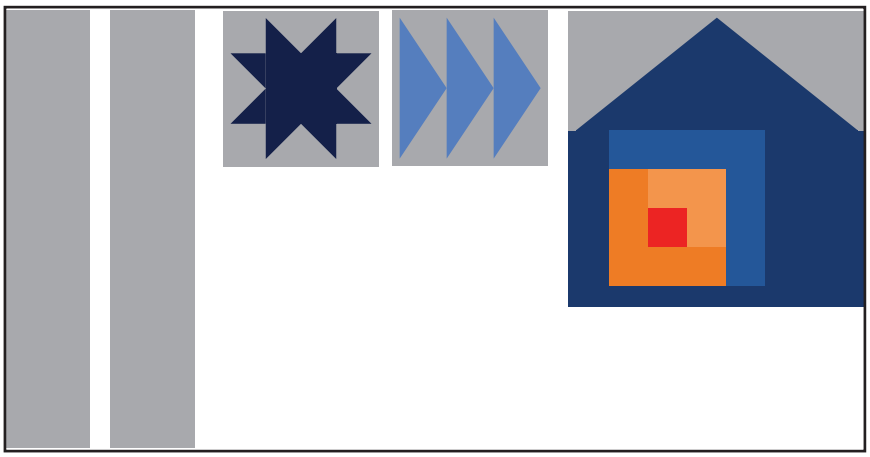

THE SUPPLIES

- Little Rebel machine
- Finesse thread (came with machine)
- Extension table (came with machine)
- Quilt panel (came with machine)
- Little Rebel instruction manual (came with machine)
- T-handle Allen wrench 3 mm (came with machine)
- Batting (28 x 26 inches)
- Fabric for the quilt backing (28 x 26 inches)
- Fabric for the pillow back (15 x 12 ¼ inches)
- Iron
- Ironing board
- Measuring tape or 12-inch ruler
- Pencil or chalk
- Pins
- Hand needle
- Stuffing
- Sharp scissors or rotary cutter
- Cutting mat
- Thread snips (optional)
- Large, rigid ruler (optional)
- Spare full bobbins (optional)

VOCAB REVIEW

Quilt/Quilting: An item created by sewing together layers of fabric. Also, the process of sewing those layers together.

Frame Quilting: A technique for sewing a quilt where the fabric stays still and you move the machine. You need a quilting frame to use this technique.

Off-Frame Quilting: A technique for sewing a quilt where the machine stays still and you move the fabric as needed.

Piecing: Sewing smaller pieces of fabric into a pattern that becomes your quilt top.

Backing: Fabric on the underside of a quilt. It might be solid piece of fabric, or a second quilt top.

Batting: Cushioning material that adds insulation, dimension and texture to your quilt.

Quilt Sandwich: A quilt top laid over a layer of batting and backing fabric. All three layers are stitched together when quilting.

Sewing Mode: Used for straight stitching. In this mode, the feed dogs grip the fabric, guiding it in a straight line under the presser foot.

Quilting Mode: Used for free-motion quilting. In this mode, the cover plate sits over the feed dogs, allowing the fabric to move freely under the hopping foot.

Before you start, make sure:

your machine is fully set up,
you have all your supplies, and
you are ready to have some fun!

Lesson 1: Cutting Your Pieces

For this project, take the panel and cut it into five pieces. For all quilting projects, make sure you leave some extra fabric on each piece between the stitches and the raw edge of the fabric. This extra fabric is called a **seam allowance,** and keeps your pieces together even if your stitches stray a bit.

KEY CONCEPT

You must give yourself a bit of extra fabric (called a seam allowance) when you prepare your pieces. For this project, the blocks in the panel have a built-in seam allowance.

For this project, a 1/4 inch seam allowance is built into the pieces, so cut them out without adding any extra space.

PRACTICE STEPS

To cut your pieces, you need:

- Quilt panel
- Iron
- Ironing board
- Sharp scissors or rotary cutter
- Cutting mat
- Optional: rigid ruler or fabric weights

VOCAB REVIEW

Seam allowance: Extra fabric on the side of your piece that makes it easier to join your pieces together.

1. Optional step: Wash the panel. This is an **optional** step, but washing the panel removes any warping or stress on the fabric from when the panel was manufactured.

2. Lay your quilt panel out on your ironing board, and gently smooth out any creases in the fabric. Making sure the fabric is flat before you cut out your blocks prevents any unexpected size variance that creases can cause. The panel is made of cotton, so use the cotton setting on your iron.

3 Spread out your panel on a hard flat surface. If you're going to use a rotary cutter and mat, spread the panel over the mat on your flat surface. **Note:** Your panel might be different colors than the one used in the example images, but the process is still the same.

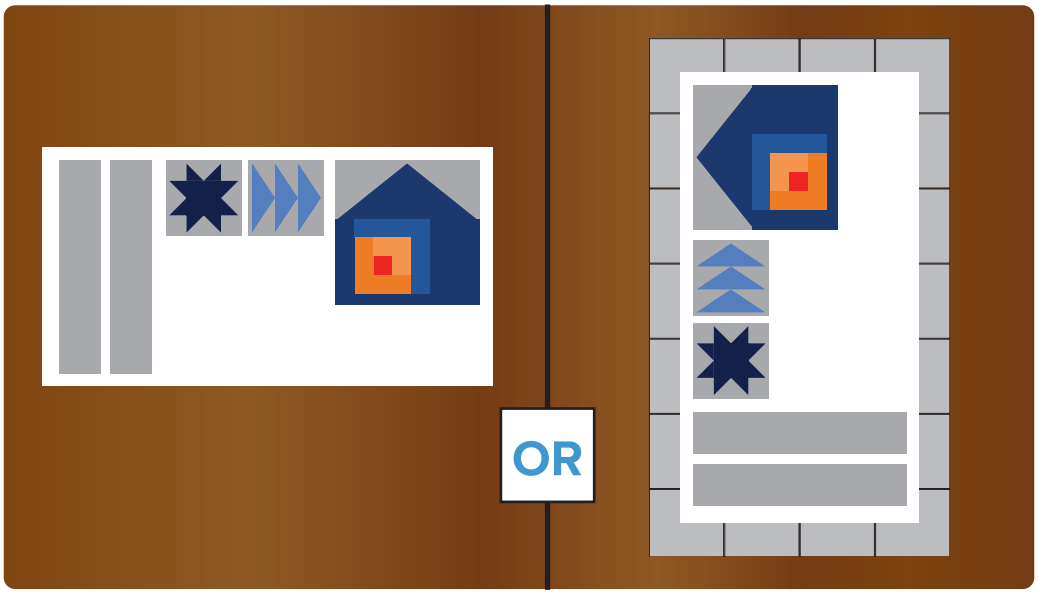

4 Cut the pieces out. It's okay if your cuts aren't perfectly straight. If your cuts aren't going straight, try to aim for cutting out too much of the fabric rather than not enough. You can always trim off the extra after the block is cut out.

Tip: Lay a rigid ruler or fabric weights on the edge of the piece and use it to keep your rotary cutter straight.

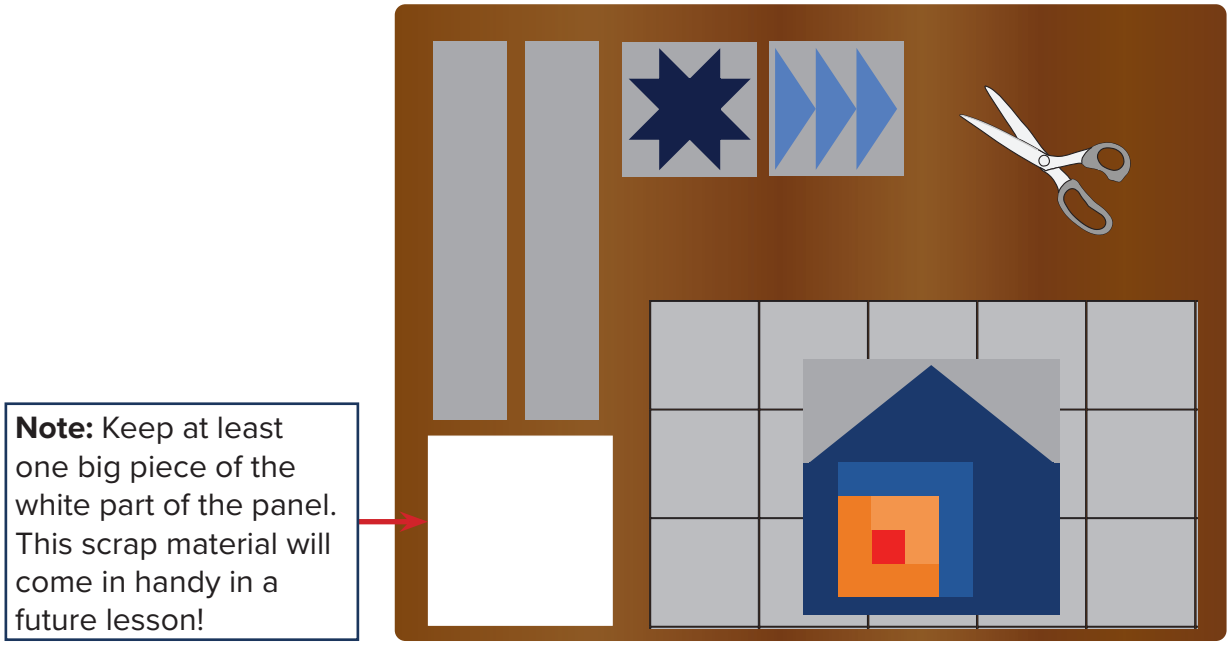

2 Lesson 2: Setting Up Sewing Mode (AKA Corralling Your Little Rebel)

When you are piecing, you want the Little Rebel in Sewing Mode to stitch. You will also use the Little Rebel in Sewing Mode when you finish your project. In Sewing Mode, the feed dogs are exposed and move the fabric under the needle as you sew.

To set up the Little Rebel for sewing, do the following:

- Install the presser foot
- Connect the foot pedal
- Uncover the feed dogs
- Confirm the thread tension

KEY CONCEPT

When you are ready to piece, make sure that the Little Rebel is in Sewing Mode. This allows the feed dogs to grab the fabric and move it.

Note: If this project is the first one you're creating with the Little Rebel, then the machine is probably already in Sewing Mode, as that's the mode it's shipped in. Read through the steps here anyway, to make sure you know how the machine looks in Sewing Mode. For more information about setting up Sewing Mode, refer to the Little Rebel instruction manual.

PRACTICE STEPS

To set up Sewing Mode, you need:

- Presser foot holder
- Foot pedal
- T-handle Allen wrench 3 mm (came with machine)

VOCAB REVIEW

Sewing Mode: In this mode, the feed dogs grip the fabric, guiding it in a straight line under the presser foot.

Note: Before you begin, make sure your Little Rebel is on a table or other flat work surface, not on a quilting frame.

1. Rotate the **hand wheel** counterclockwise until the **needle** is in the highest position.

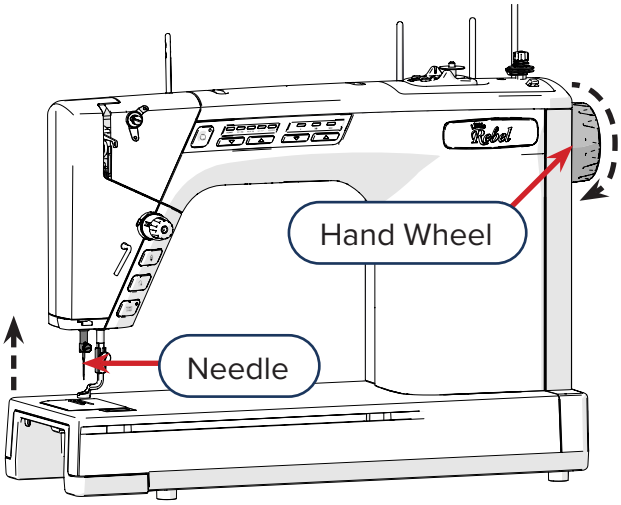

2 Remove the magnetic **quilting plate** from the needle area. The machine beeps to show that it is in Sewing Mode.

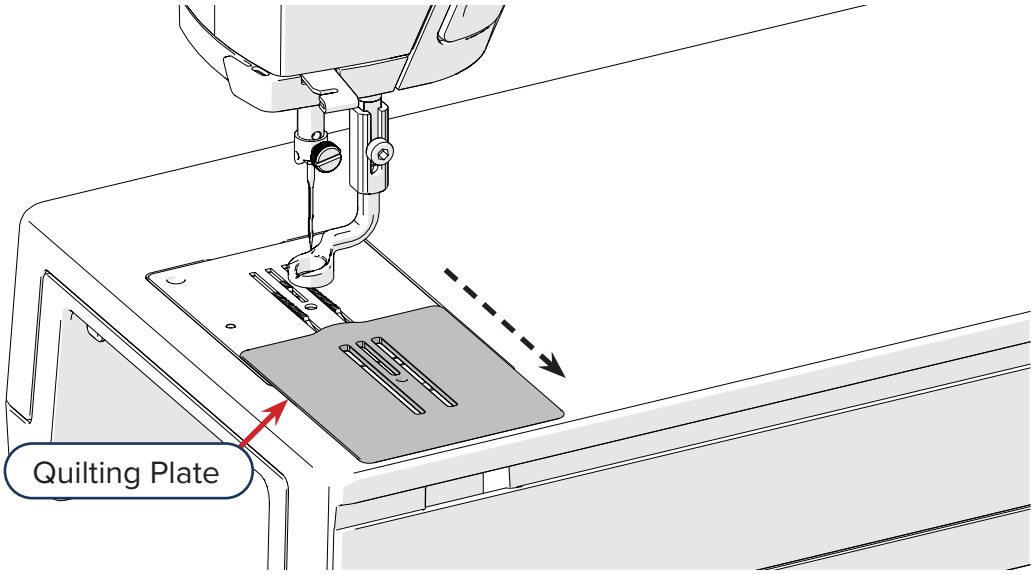

3 Use the 3 mm T-handle Allen wrench to remove the **foot screw,** then slide the **hopping foot** from the **presser bar**.

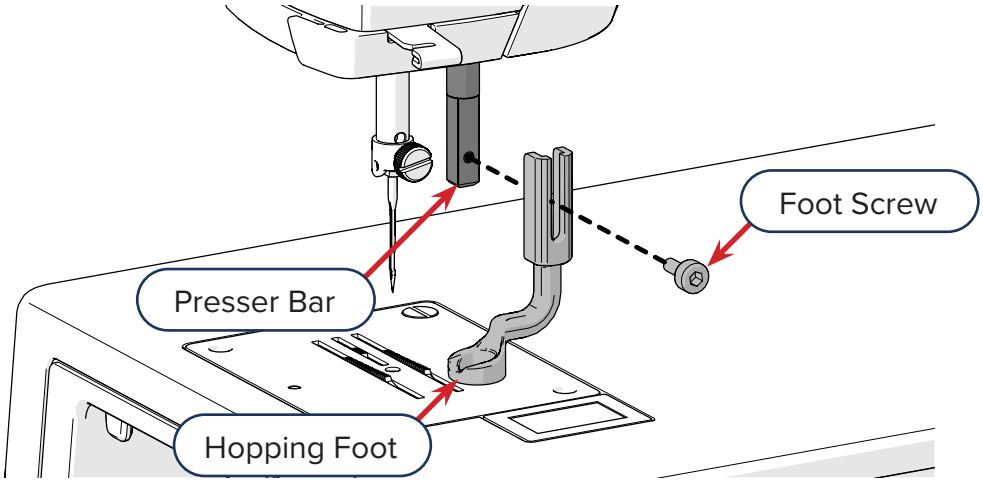

4 The presser bar lever has two positions: **low** and **high**. Lift the presser bar lever to the high position.

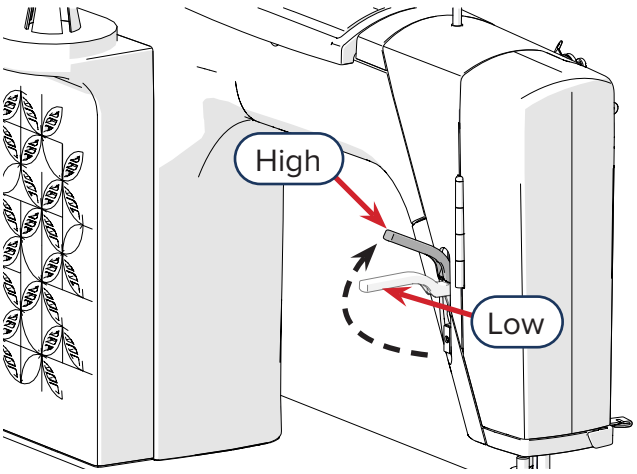

Note: The machine will not stitch while the lever is raised in either the low or high position.

5 Align the **line** on the **presser foot holder** with the center of the screw hole in the presser bar. Insert the foot screw. Tighten the foot screw with the 3 mm T-handle Allen wrench till you meet resistance, then one quarter turn more.

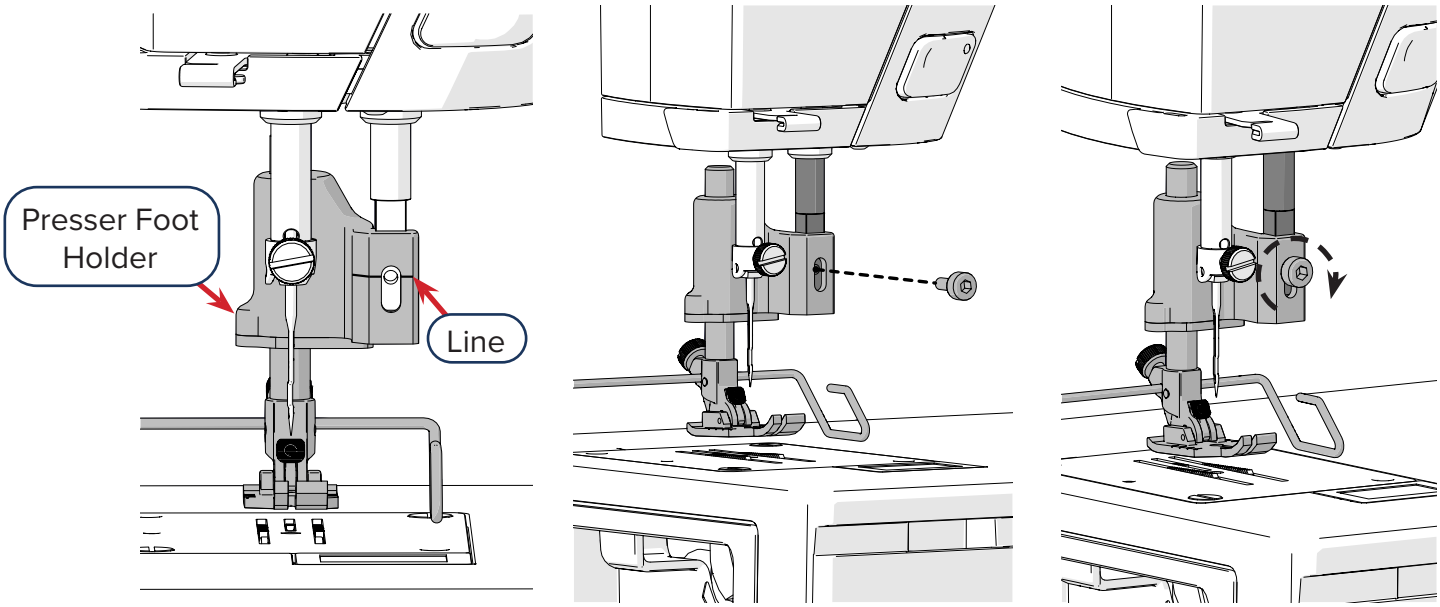

6 Plug the foot pedal into the back of the machine.

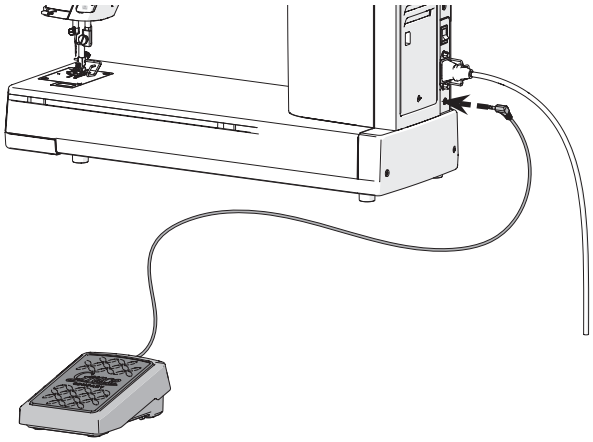

7 Take one of the pre-wound bobbins of Finesse thread that came with your panel kit.

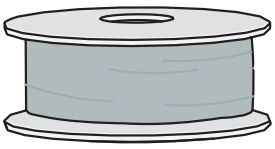

8 Put the pre-wound bobbin in the bobbin case. Test the tension, and then when the tension is right, put the bobbin case in the machine. Thread the machine. For detailed instructions on doing this, look in the Little Rebel's instruction manual.

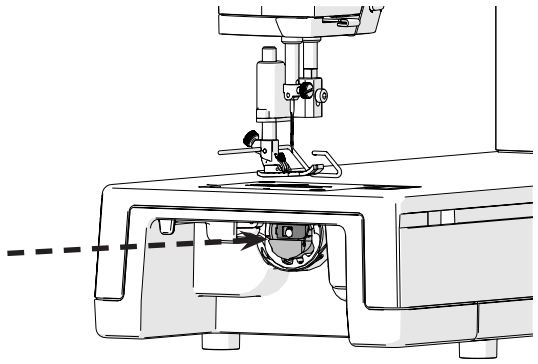

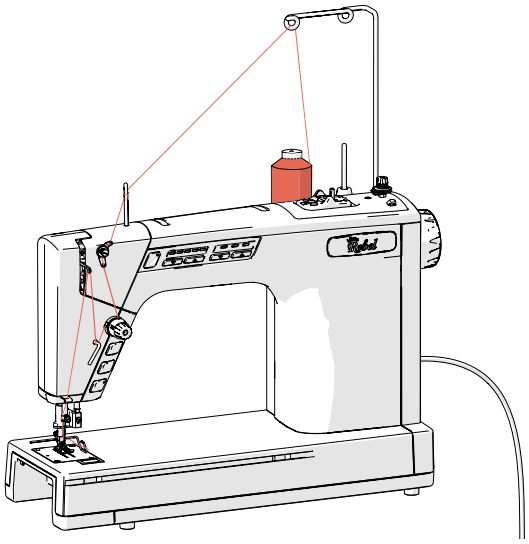

Note: The color of your thread doesn't match the image example. Use the Finesse thread included in your panel kit.

9 Take the following steps to pull up your bobbin thread. These steps are separate from what you do to pull up your bobbin thread when you quilt. You will learn about that process later.

PULLING UP THE BOBBIN THREAD (NEEDLE PLATE)

Every stitch made with a sewing machine has two threads: the top thread (from the cone or spool on the machine) and the bottom thread (from the machine's bobbin). When you first start stitching, the tail of the bobbin thread is underneath the needle plate. Because the thread is near the hook assembly, it's easy for the thread to get caught, tangled, or broken in the hook assembly. To prevent this, you must bring the bobbin thread up above the needle plate. Pull your bobbin thread above the needle plate every time you start stitching, whether you're in Sewing Mode or Quilting Mode.

a Hold the **top thread** tightly and rotate the hand wheel counterclockwise so that the needle dips down and comes all the way back up.

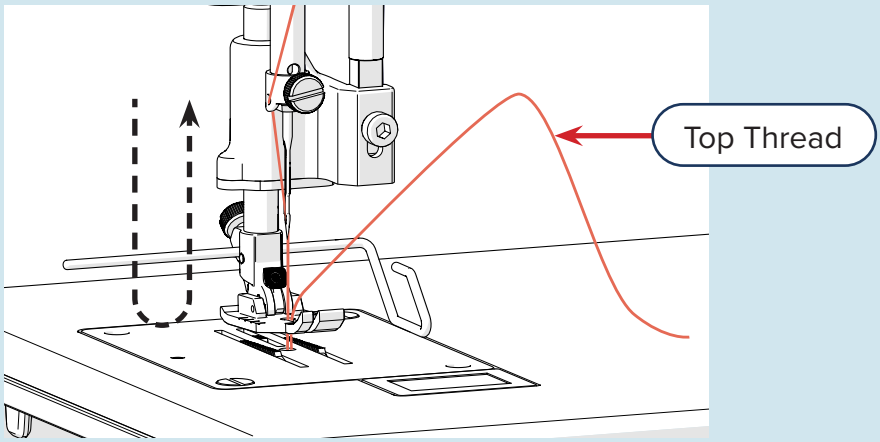

b Continue holding the top thread, and pull on it until it pulls up a loop of the bobbin thread. Pull on the loop until the loose end of the **bobbin thread** comes up.

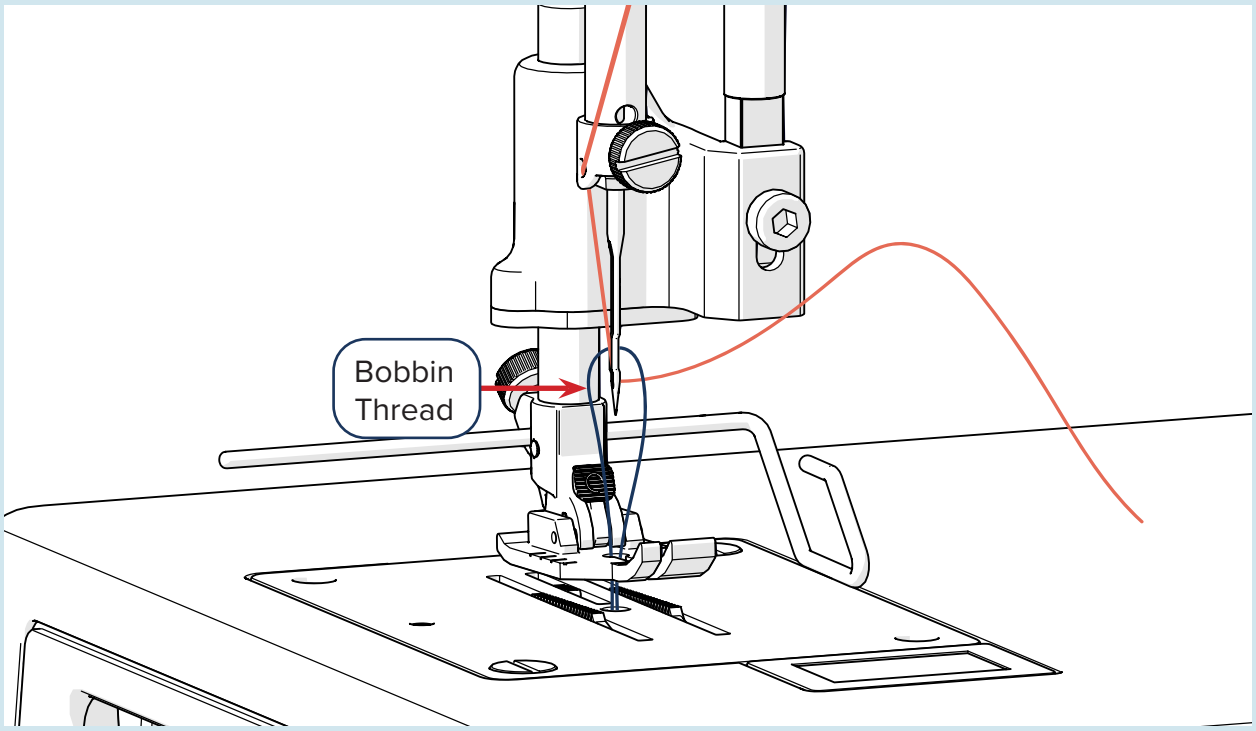

c Straighten out both threads under the **presser foot** and lay them out behind the needle plate.

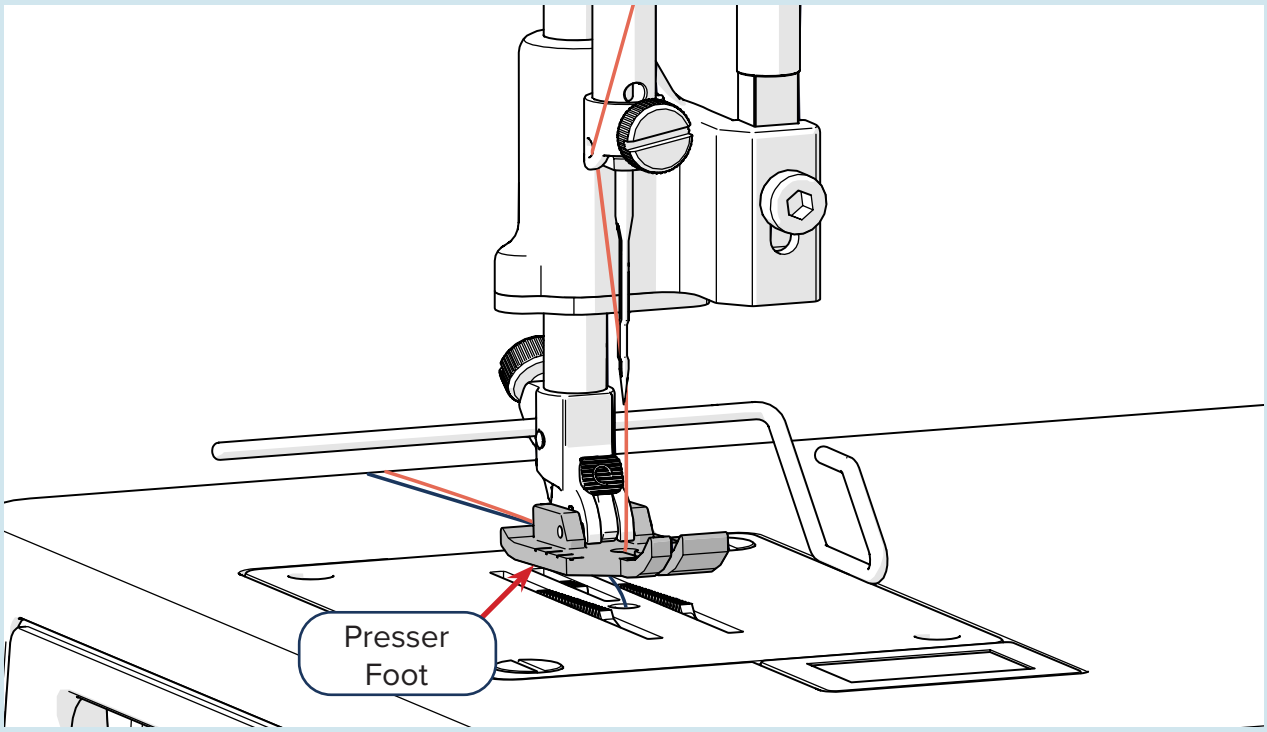

10 Grab a small piece of leftover white fabric from the panel (*not* the piece you set aside in lesson 1) and test your thread tension. If you need to adjust the tension, use the large thread tensioner knob first, as you already set your bobbin tension. For detailed instructions on doing this, look in the Little Rebel's instruction manual.

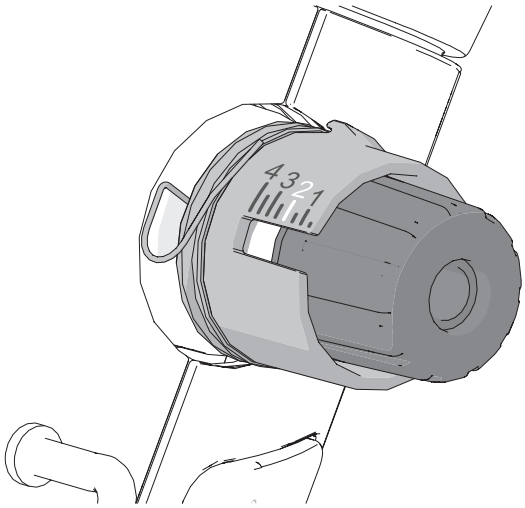

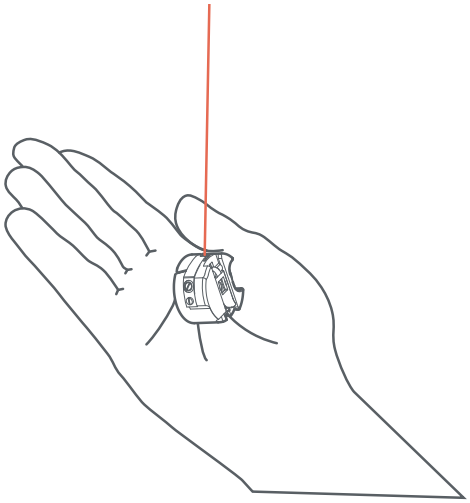

3 Lesson 3: Starting the Piecing Process

KEY CONCEPT

Sew your pieces together with the right sides facing each other. Use a 1/4-inch seam allowance, and keep the stitches as straight as you can.

Once the Little Rebel is in Sewing Mode and you have tested your thread tension, you are ready to sew your first two pieces together.

When you sew your **blocks** together, you want the excess seam allowance to end up on the inside of the finished project. To do this, you will put the **right side** of each piece together and then join them at one edge. The right side of the fabric is the side you want to be visible in the finished product. It typically has a print or design. Even on a plain, unpatterned fabric, the color on the right side is often more vivid. In this case, the panel has an obvious right side of the fabric.

The **wrong side** of the fabric is the side you want to be on the inside of the finished product. It might not have a print or texture, or it might look washed out compared to the right side. It can be tricky to tell which side is the wrong side. If you really can't tell the difference, just pick a side to be the wrong side.

PRACTICE STEPS

To piece together the block, you need:

- The two smallest blocks
- Little Rebel in Sewing Mode
- Pins

VOCAB REVIEW

Block: A unit of the quilt top. As you piece your quilt top together, your blocks link together to form bigger blocks. Each unit of the quilt top is still a block, even after being linked to other pieces to make bigger blocks.

Right Side: The side of the fabric you want to show off. It is probably brighter or more patterned than the wrong side.

Wrong side: The side of the fabric you want to be inside the project. It might be duller or plainer than the right side.

1. Locate the two smallest blocks. One of them has a **star pattern**, and the other has the **Flying Geese pattern**. Set them next to each other, with the long (flat) side of the Flying Geese toward the star.

2. Lay the Flying Geese on the star block, right sides together, and make sure the blocks are lined up straight.

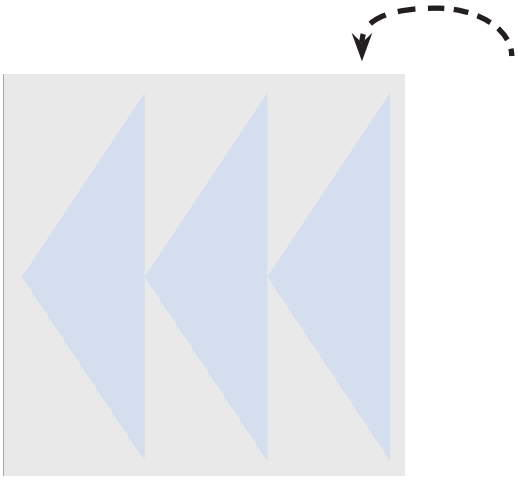

3. Pin the blocks together.

Note: With blocks as small as these, you might be tempted to "save some time" and not pin them together. However, if the blocks don't stay straight, then you'll have to spend more time picking the stitches out and doing it again. It's a better idea to establish a habit of pinning all of your blocks when piecing, regardless of the size of the blocks.

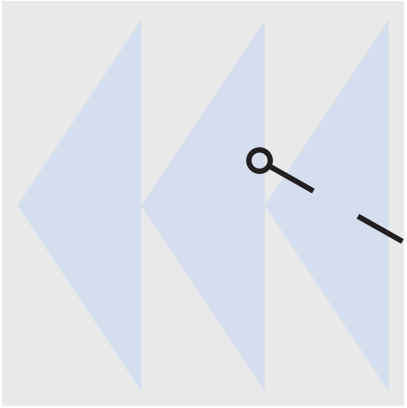

4 Raise the presser foot on the Little Rebel with the presser foot lever. Then, slide the blocks under the presser foot.

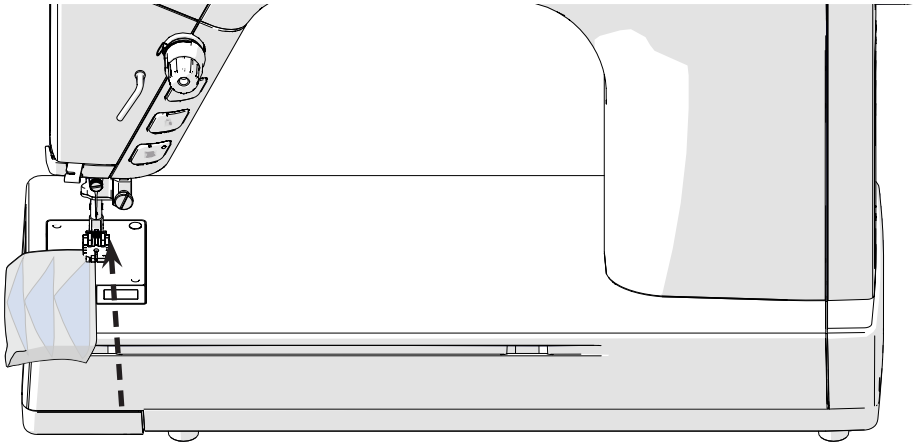

5 Line up the edge of the fabric with the **1/4-inch mark** on the needle plate. Lower the presser foot with the lever when the fabric is in position.

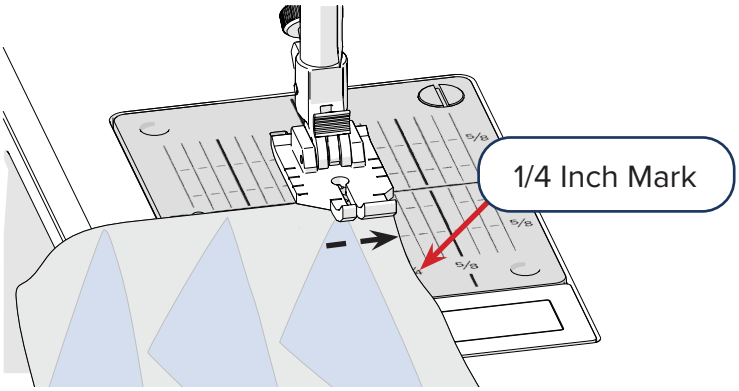

6 Press down on the foot pedal to start sewing. Keep the edge of the fabric on the mark as you sew. Lift your foot off the foot pedal when you are finished. Also, use the thread cutter to cut the threads and release your finished block.

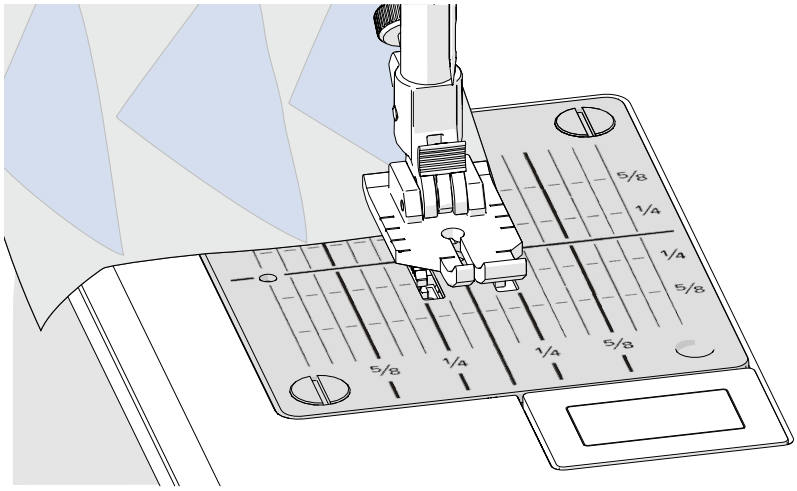

4 Lesson 4: Pressing the Seams

KEY CONCEPT

After you sew together two pieces, you should flatten the shared edge. Pressing after sewing minimizes distortions and helps your quilt blocks fit together better.

Now that your first two blocks are sewn together, you might notice that they don't want to lay flat on your work surface. To get the block to be flat, you need to **press** the seams. When you do this, it's kind of like running your finger on a crease in a piece of paper to stabilize the crease and make it flat. You use an iron's heat and weight to press down, but you don't move the iron while on the fabric. As you press the seams, you'll also **stabilize the stitches**, which sinks the stitches into the fabric and helps to smooth out any wrinkles.

PRACTICE STEPS

To press your seams, you need:

- Sewn quilt block
- Iron
- Ironing board
- Optional: water or starch

VOCAB REVIEW

Pressing: Using an iron to apply pressure to a seam, causing it to lay flat. You use the heat and weight of the iron, rather than movement, to get the fabric to flatten.

Stabilize the stitches: A specific type of pressing, done to sink the stitches into the fabric. Stabilizing the stitches also smooths out any wrinkles or puckers in the fabric.

1. Set your quilt block on the ironing board, still folded with the right sides together. Make sure your iron is hot. For the panel, the cotton setting on your iron works.

2 Press the seam flat to stabilize the stitches.

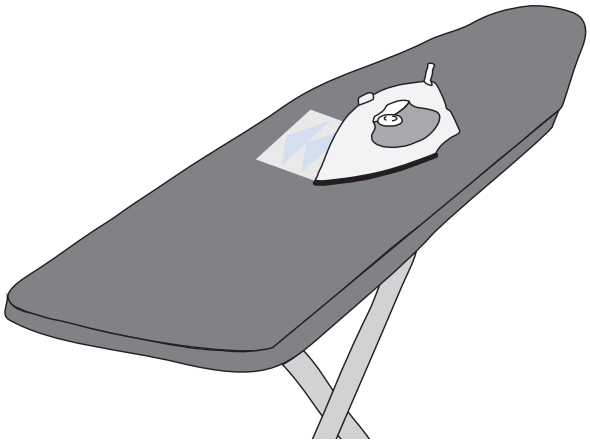

3 Lift the **Flying Geese** side up, and then lay the block open. Press the seam flat.

Note: Most of the time, you want to press the seam toward the darker fabric so it isn't visible through a lighter-colored fabric. For the panel, your blocks are the same color, so it doesn't matter which side the seam ends up on. If the seam favors one side, press to that direction.

Tip: If the seam resists laying flat, put a bit of water or starch on the blocks and press again.

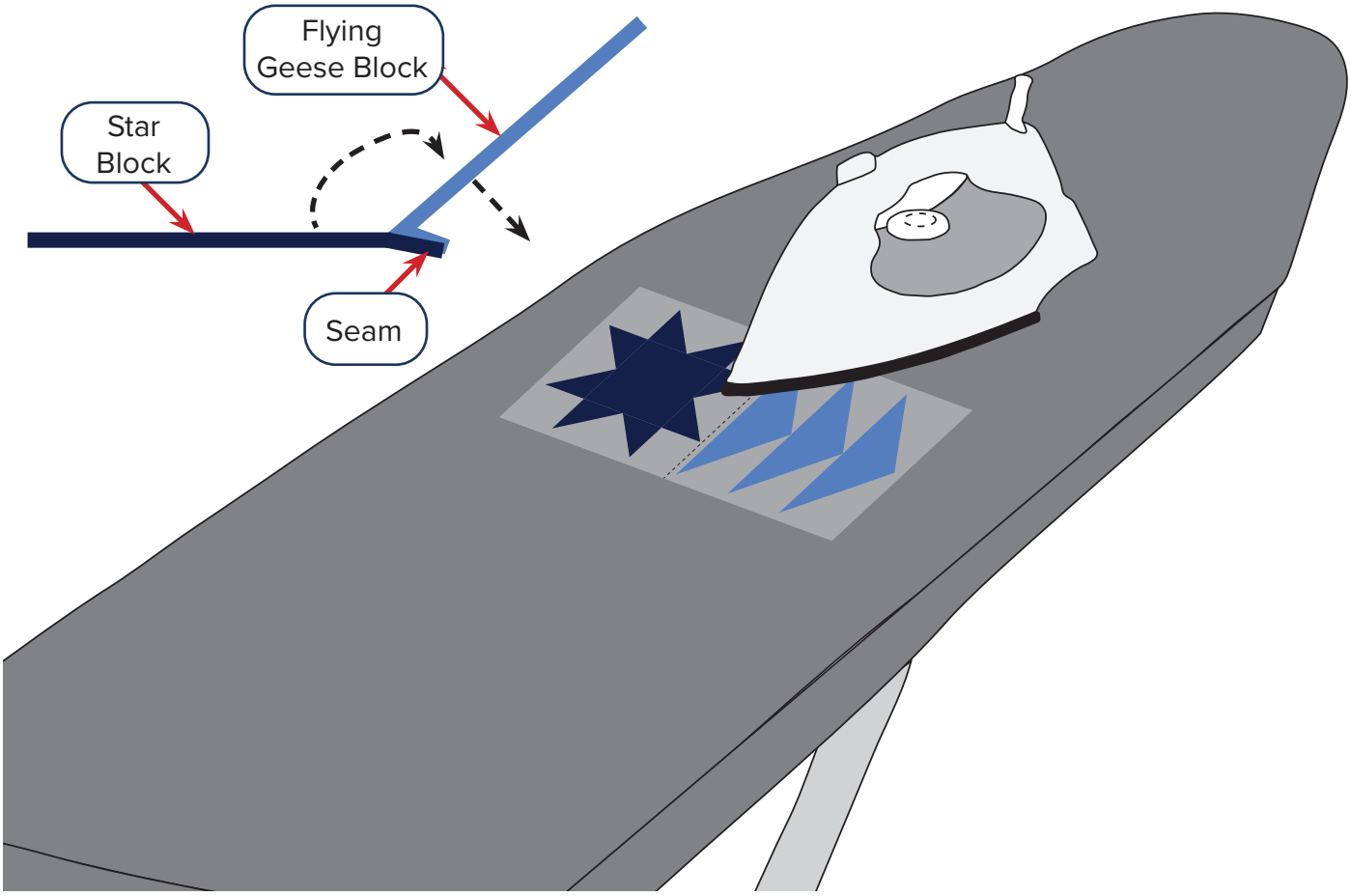

5 Lesson 5: Finishing Piecing

Nice! You have your first block for this project all set. Now it's time to finish piecing. Keep adding the blocks until the quilt top is finished. As you practice stitching and pressing, your confidence will increase.

KEY CONCEPT

As you add more pieces to your quilt blocks, continue to focus on the seam allowance and pressing the edges flat. Getting this process right improves the quilt's look when it's finished.

PRACTICE STEPS

To finish piecing, you need:

- Little Rebel in Sewing Mode
- Pins
- Sewn quilt block
- Other blocks
- Iron
- Ironing board
- Optional: water or starch

1. Pin the **cabin block** to your first block, right sides together. Then sew the blocks together with a 1/4 inch seam allowance.

   Note: Make sure the top of the cabin is toward the seam, and that the seam of the first block is centered with the **tip** of the triangle on the cabin.

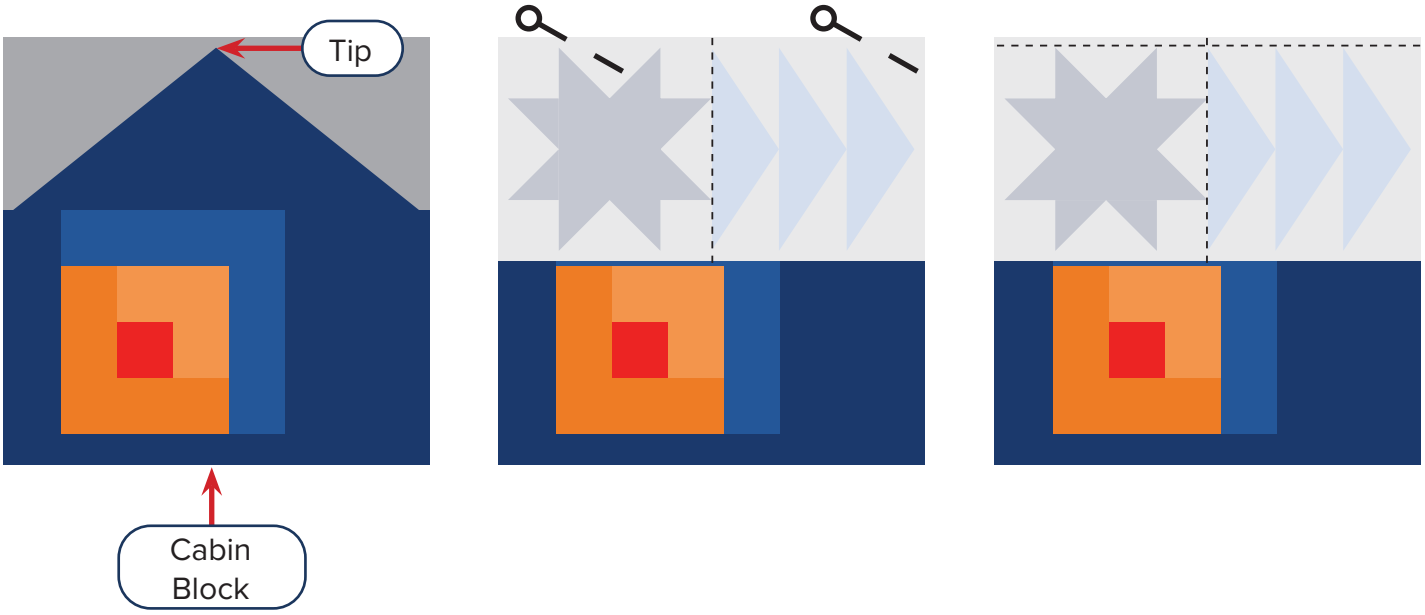

2 At the ironing board, stabilize and press the new seam.

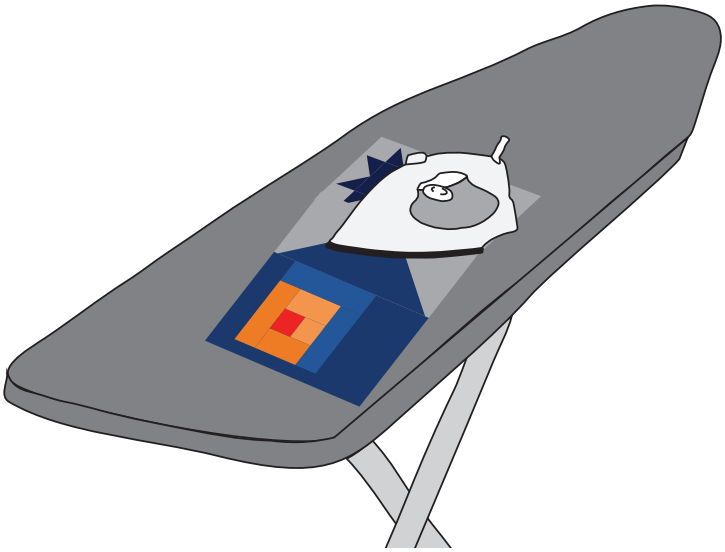

3 Repeat steps 1 and 2 with the long, solid color edge pieces. Put one on each side of the cabin.

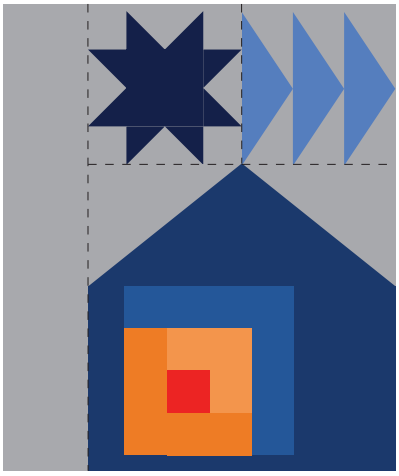

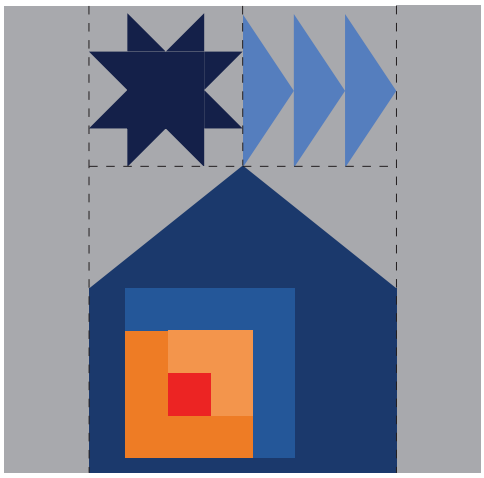

4 Congratulations! You've finished piecing your quilt top. Next, it's time to make your quilt sandwich.

6 Lesson 6: Making Your Quilt Sandwich

(Not very tasty, but fulfilling and satisfying)

A **quilt sandwich** is made of a quilt top laid over a layer of batting and backing fabric. When quilting, it's important to cut the quilt backing and batting larger than the top. This extra length helps you get the edges of your quilt top under the needle without risking your fingers being under the needle too. You also want to make sure you set the **scrim side** of your batting (which is often coarse) correctly, so that the fluffy side of the batting is next to the quilt top.

For this project, you are making a pillow, so you might be wondering why you are adding backing fabric right now, rather than just using the batting. Technically, you could attempt to make a quilt sandwich with just the quit top and the batting. However, just like how open-faced sandwiches are more messy than ones that have two slices of bread, a quilt sandwich with all three layers is easier to work with. The backing fabric prevents the batting from catching on any parts of your Little Rebel. So for this project, make the complete quilt sandwich. Once you feel confident with your skills, experiment all you like.

KEY CONCEPT

You must cut the backing and batting larger than the quilt top to protect your fingers. Using backing with your batting also keeps the batting from catching on the machine.

PRACTICE STEPS

To make your quilt sandwich, you need:

- Quilt top
- Backing
- Batting
- Pins
- Pencil or chalk for marking
- Measuring tape or 12-inch ruler

VOCAB REVIEW

Quilt Sandwich: A quilt top laid on batting and backing fabric. All three layers are stitched together when quilting.

Scrim Side: A structural layer on some types of batting. It often feels coarse or pimpled, while the other side feels smooth or "puffy."

1. Cut your backing and batting so that it is 10 inches longer and wider than the quilt top. You always want your backing and batting to stick out a few inches from your project to keep your fingers away from the needle. The 10 inches here makes a 5 inch border for the quilt top. We'll also be making use of that extra space for some practice in a later lesson.

   Tip: One easy way to measure your backing and batting is to lay your quilt top on the fabric with the top and left edges lined up, and then use a ruler to mark 10 inches out from the bottom and right edges.

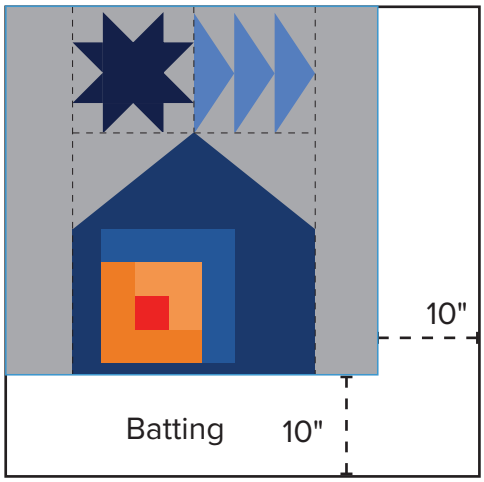

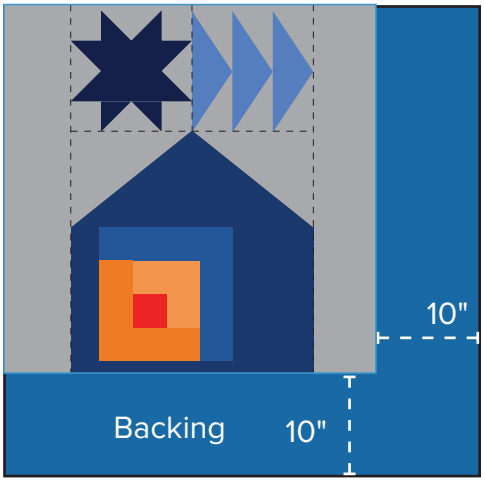

2 Fold the quilt top in half vertically, and then mark the center of the top and bottom edges.

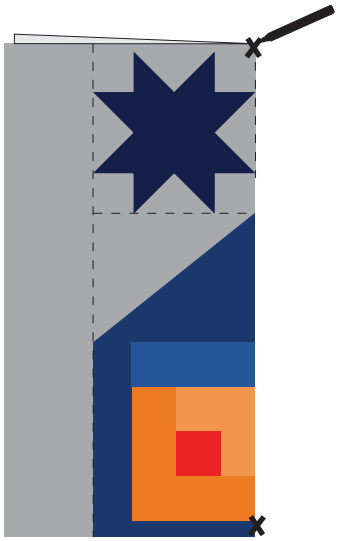

3 Now spread the quilt top out flat with the right side facing up. Starting at the bottom, roll up the quilt top. Rolling up the quilt top makes it easier to place in a moment.

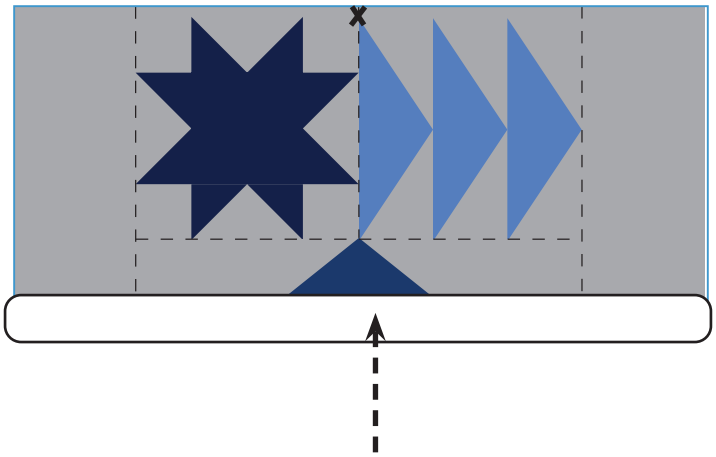

4 Fold your batting in half vertically so that the scrim is on the inside.

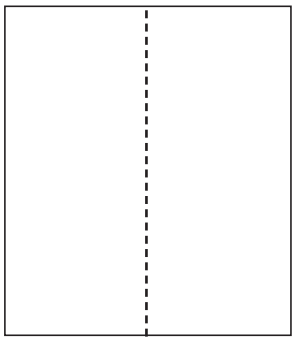

Note: When folding vertically, remember that the batting is taller than it is wide.

5 Mark the center of the top edge. Then mark 5 inches below that point. Next, mark the center of the bottom edge and mark 5 inches above it.

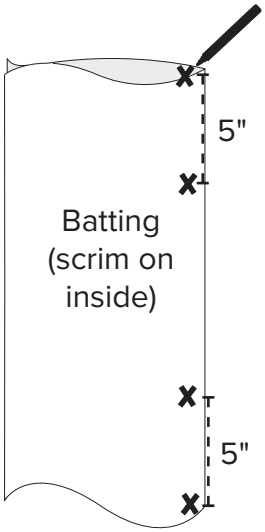

6 Spread your batting out flat with the marks facing up. Start at the bottom and roll up the batting. Rolling up the batting makes it easier to place in a moment.

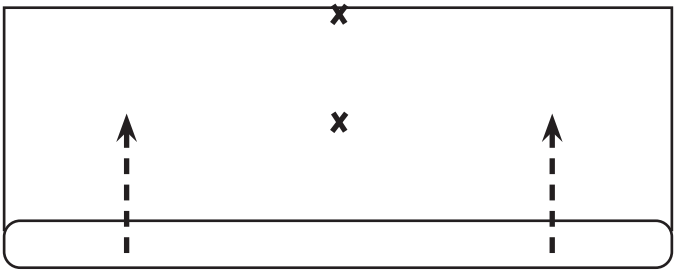

7 Lay the quilt backing down flat with the wrong side facing up. Smooth it free of any wrinkles.

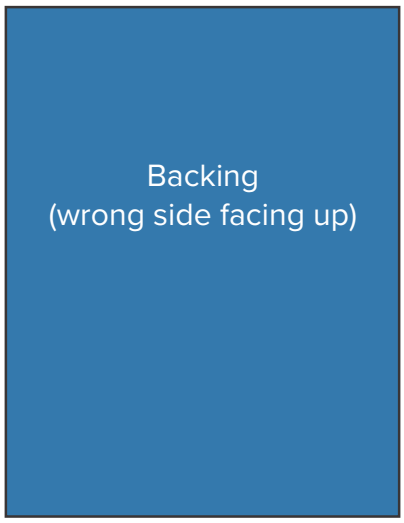

8 Line up the top edge of your batting with the top edge of the backing. Unroll the batting so that it lays over the backing.

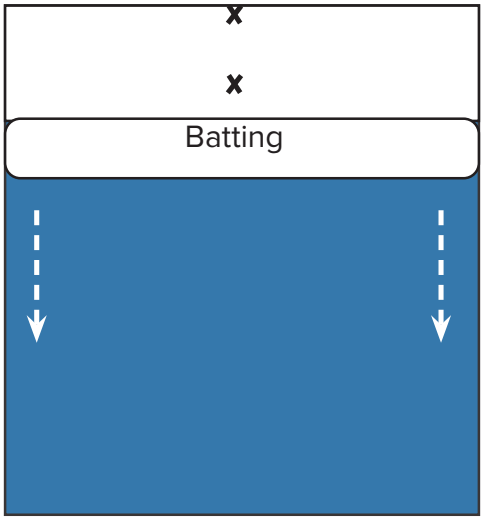

9 Smooth out any wrinkles and pin the layers together.

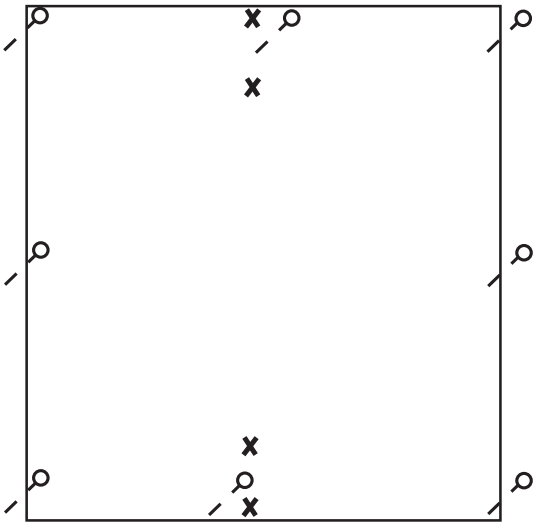

10 Now align the top center mark of the quilt top with the mark 5 inches below the top of the batting.

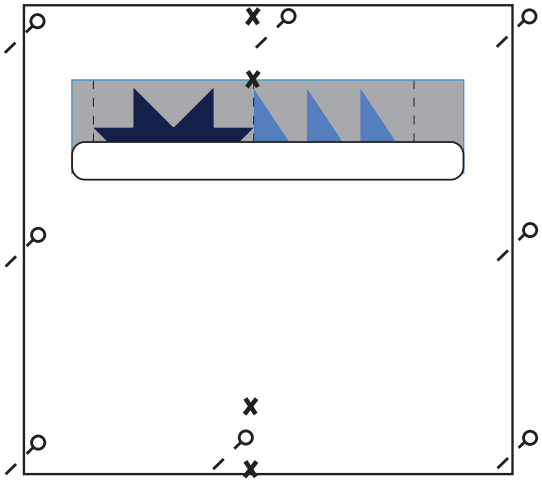

11 Unroll the quilt top.

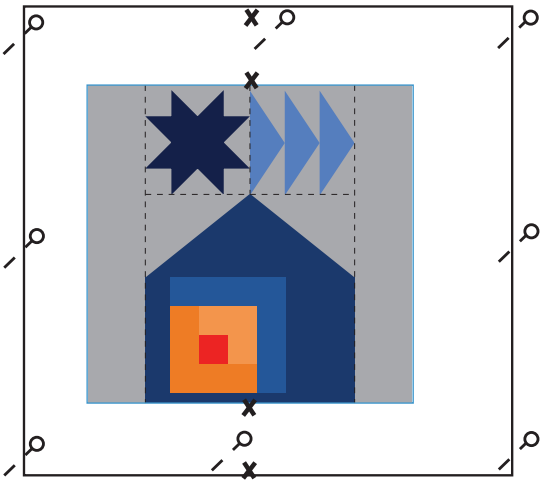

12 Smooth out any wrinkles and pin the layers together.

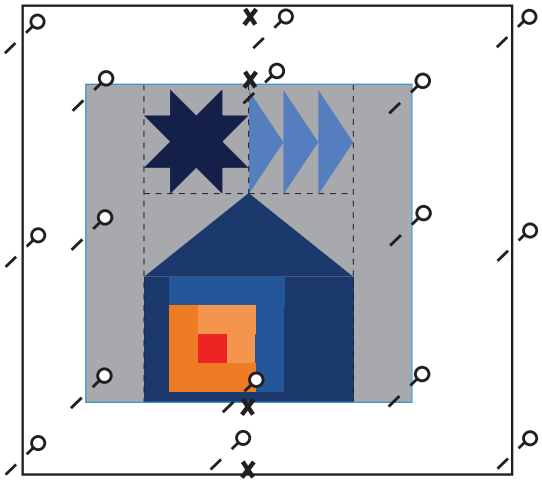

7 Lesson 7: Setting Up Quilting Mode (AKA Letting Your Little Rebel Run Free)

One of the perks of the Little Rebel is that it can **regulate** your stitches in **Quilting Mode**. In Quilting Mode, the feed dogs are covered, which allows the fabric to move freely under the hopping foot. If you turn on regulation, a sensor on the bed of the Little Rebel tracks the movement of the fabric over the machine and adjusts to keep your stitches uniform.

KEY CONCEPT

Before you sew on your quilt sandwich, make sure the Little Rebel is in Quilting Mode. You must change to a hopping foot and cover the feed dogs.

Note: The instructions in this section are specific to **off-frame quilting**, which is the type of quilting you will use for this project. If you want to quilt with your Little Rebel on a frame, you must follow the instructions in the Little Rebel instruction manual.

PRACTICE STEPS

To set up Quilting Mode, you need:

- Quilting plate
- Hopping foot
- Foot pedal

VOCAB REVIEW

Regulate/Regulation: A sensor near the quilting plate lets the Little Rebel adjust the speed of the needle to keep your stitches the same size.

Quilting Mode: In this mode, the cover plates sits over the feed dogs, allowing the fabric to move freely under the hopping foot.

Off-frame Quilting: A technique for sewing a quilt where the machine stays still and you move the fabric as needed.

1. Rotate the **hand wheel** counterclockwise until the needle is in the highest position.

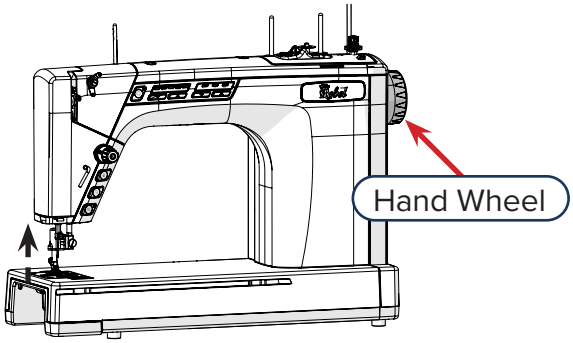

2. Lift the **presser bar lever** to the highest position, and then use the 3 mm T-handle Allen wrench to remove the **foot screw** and **presser foot holder** from the **presser bar**.

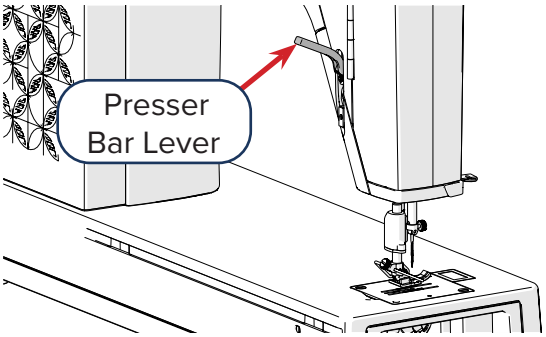

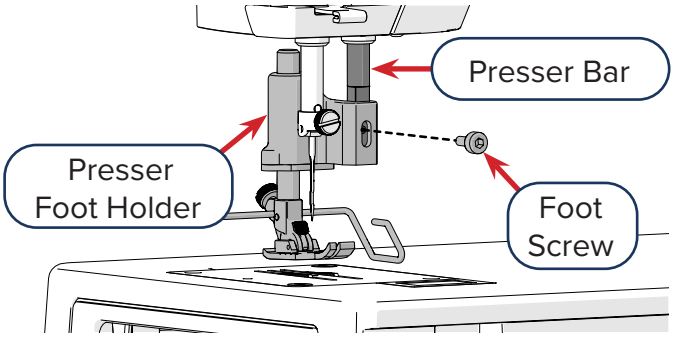

3 Remove the presser foot holder from the needle area.

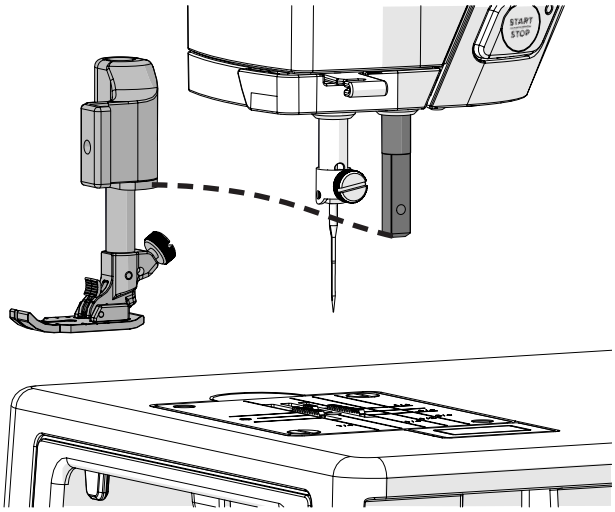

4 If the bobbin thread is currently pulled up into the needle area, then remove the bobbin case to pull the bobbin thread *out* of the needle area. Replace the bobbin case.

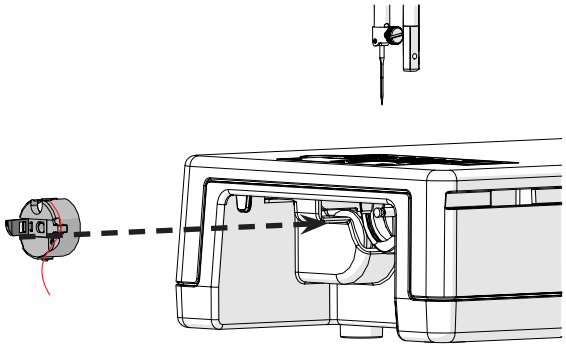

5 Slide the magnetic **quilting plate** over the needle plate. The machine beeps to show that it has switched to Quilting Mode.

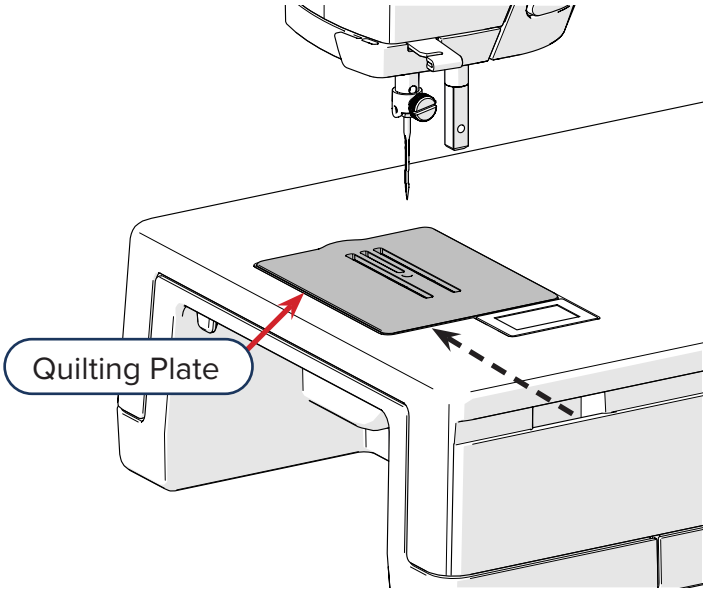

6 Lower the presser bar lever, then use the foot screw to loosely attach the hopping foot to the presser bar. Don't tighten the screw yet. The hopping foot should slide freely.

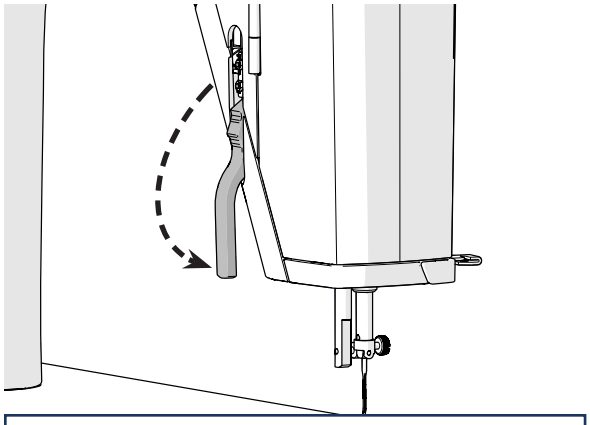

Warning: Do not lift the presser bar lever while installing the hopping foot.

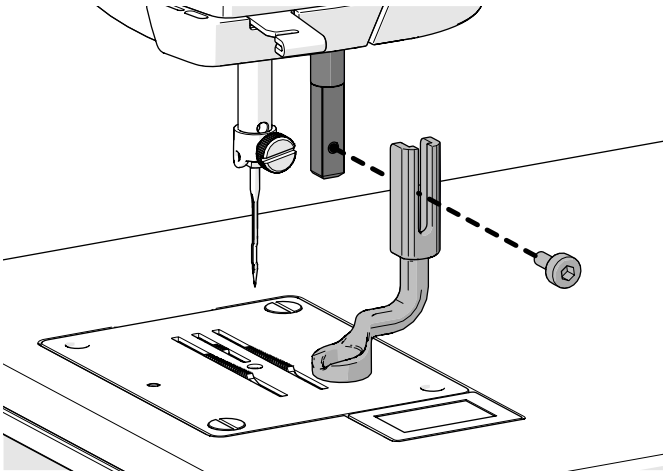

7 Lift up the hopping foot and slide the quilt sandwich underneath it.

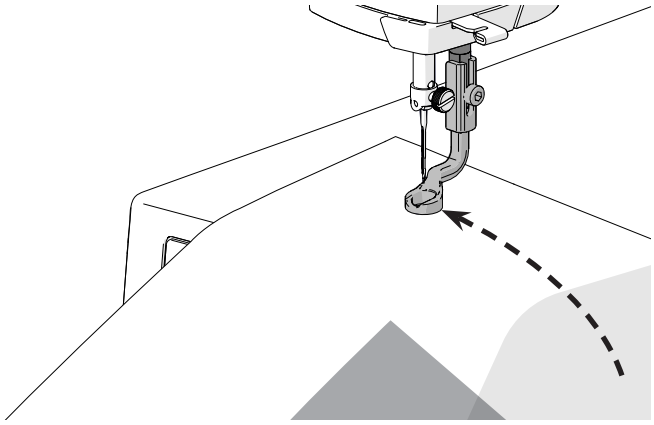

8 Slowly rotate the hand wheel until the needle is in the lowest position, through all of the quilt sandwich layers.

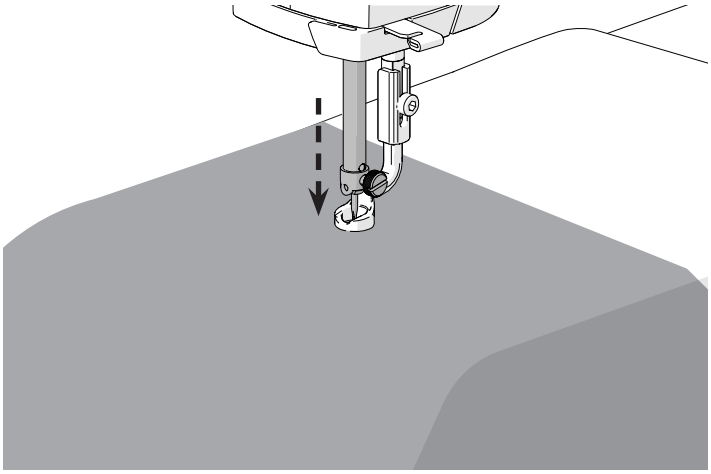

Note: If the hopping foot does not freely slide up and down on the presser bar, loosen the foot screw more.

9 Gently press the hopping foot down into the fabric and tighten the foot screw.

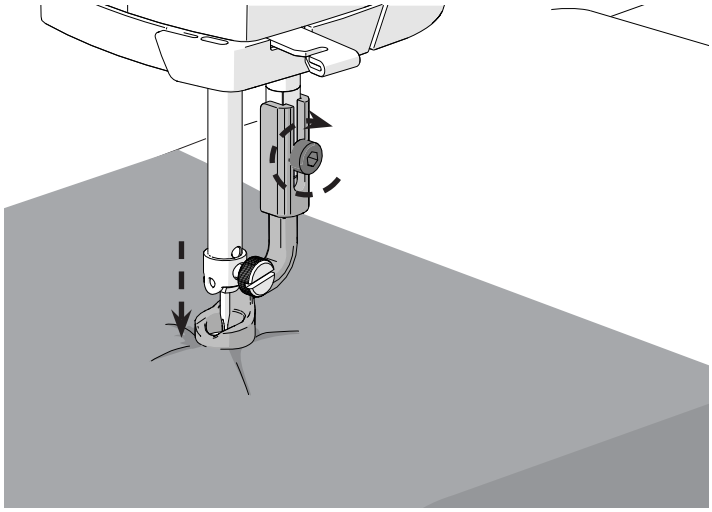

10 Rotate the hand wheel counterclockwise until the needle is in the highest position, and then remove the quilt sandwich.

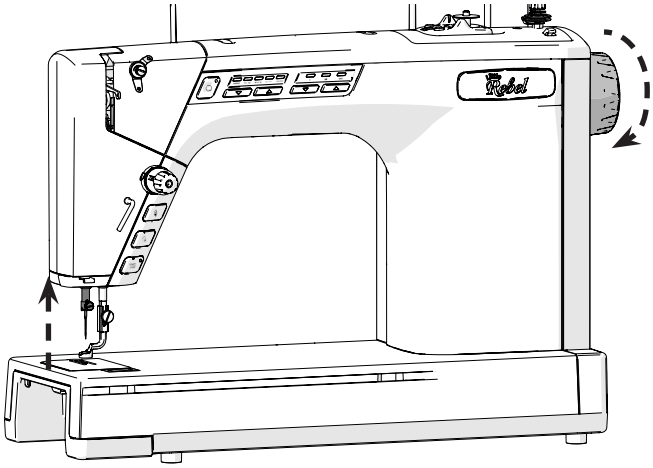

11 Make sure the foot pedal is plugged in.

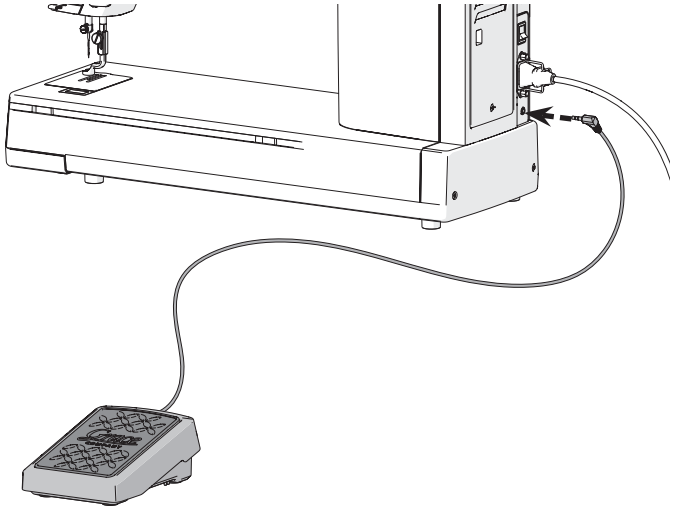

12 Attach the **extension table** to the machine. For more details, see the Little Rebel instruction manual.

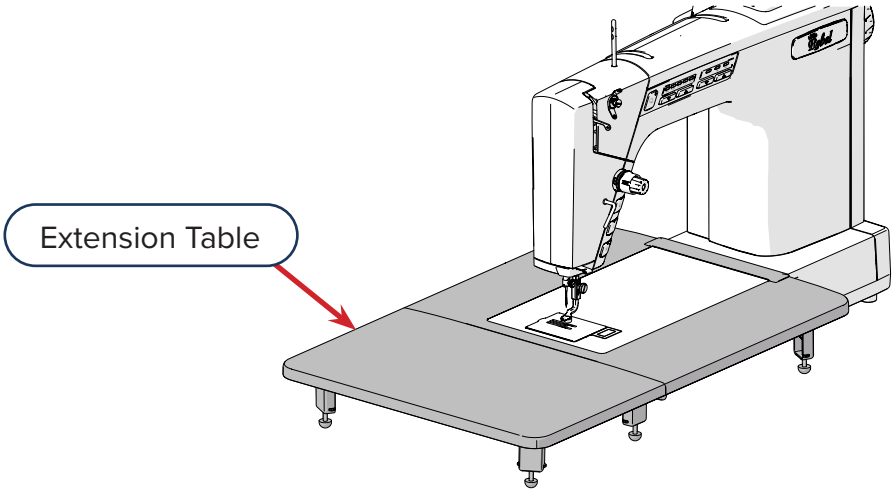

13 Check the tension on your bobbin and top thread. It's important to check your thread tension every time you switch modes. For detailed instructions, see the Little Rebel instruction manual.

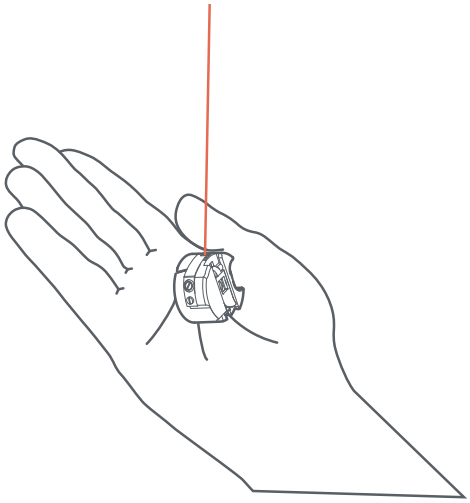

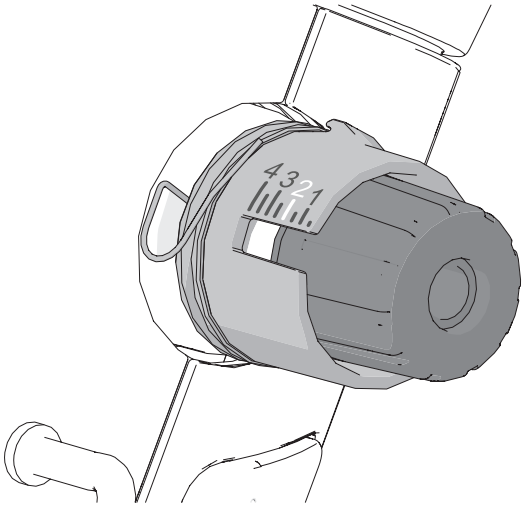

8 Lesson 8: Quilting Without Regulation

KEY CONCEPT

When you quilt without regulation, your stitch length varies based on how fast you move the fabric. Also, it's important to know how to start and end your stitches.

For this project, you are free-motion **quilting off-frame**. This means you will be pushing the fabric around while the machine is stationary. You can also use the Little Rebel on a frame. For more information, see the instruction manual.

Remember that big piece of white fabric you kept when you were cutting out your pieces? It's finally time to use it. You're going to use it to practice **pulling up your bobbin thread** when you start and end your stitching. Pulling up the bobbin thread makes sure that you don't accidentally stitch over the thread or create an unsightly bunch of thread on the back.

You're also going to use this scrap fabric to get a feel for what quilting without stitch regulation feels like. This practice will help you contrast your experience quilting with stitch regulation during the next lesson. When **stitch regulation** is turned on, the machine varies the speed of the needle moving up and down to keep your stitches the same length. With stitch regulation turned off, the machine speed is constant, so your stitches will vary in length depending on how fast you move the fabric.

PRACTICE STEPS

To practice quilting without regulation and to learn how to start and end your stitching, you need:

- Scrap white fabric from panel
- Your quilt sandwich
- Thread (installed in the machine)
- Wound bobbin (installed in the machine)
- Little Rebel in Quilting Mode with the extension table attached
- Scissors

VOCAB REVIEW

Off-frame quilting: Quilting without a frame. You move the fabric around and provide the fabric tension as needed.

Pulling up the bobbin: Making sure the bobbin thread is above the quilt sandwich so you don't sew over it and mess up the look of the back of the quilt.

Stitch Regulation: The machine uses a sensor to change the speed of the needle to keep the stitches the same length. Without stitch regulation, the speed stays the same, so the stitches have different sizes.

1. Pin your scrap white piece of fabric onto one of the edges of your quilt sandwich, with a bit of a gap between it and the **quilt top**. If needed, trim off the excess so that the scrap fits on the backing and batting completely.

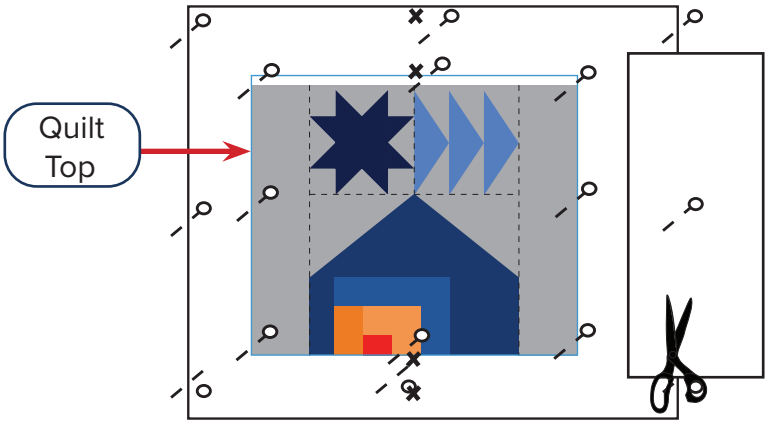

2 Slide your scrap practice quilt under the hopping foot, and then situate the needle at the top-left corner of the scrap. Press the **Q button** to turn off stitch regulation for the moment.

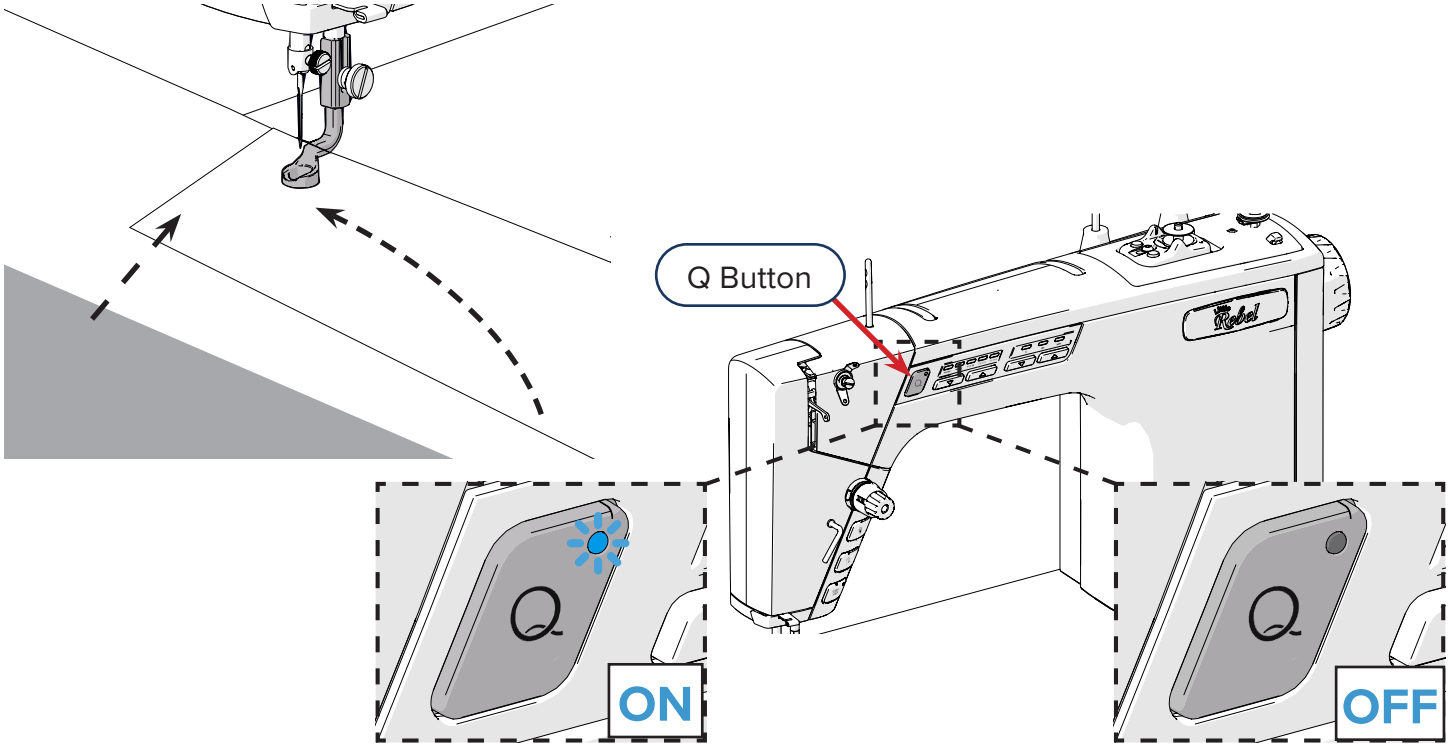

3 Every time you begin stitching, you start by pulling up your bobbin thread. This process is different from when you brought up the bobbin for sewing.

PULLING UP THE BOBBIN THREAD (STARTING)

a Make sure your needle is positioned where you want to start stitching. Pick up and hold the **top thread tail** that is threaded through the needle.

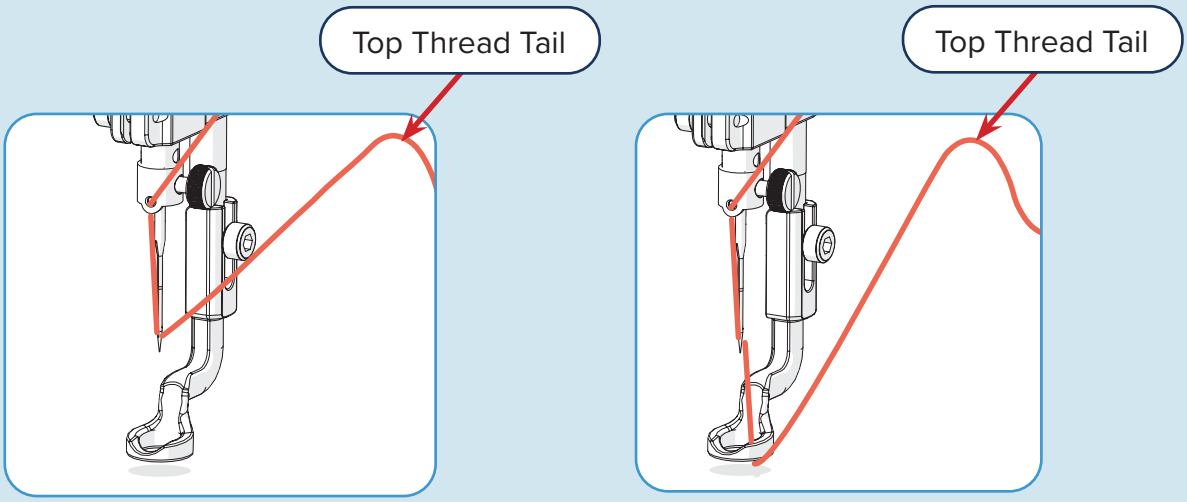

Note: It doesn't matter if the thread is under the hopping foot or not. The process of pulling up the bobbin is the same.

b While still holding the thread tail, make a single stitch by pressing the **Needle Up/Down** button twice.

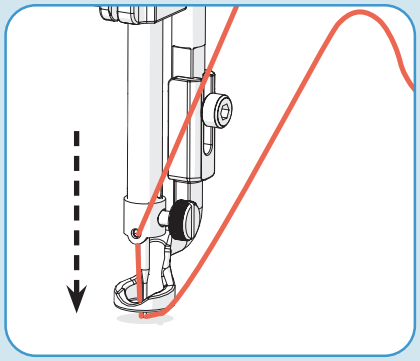

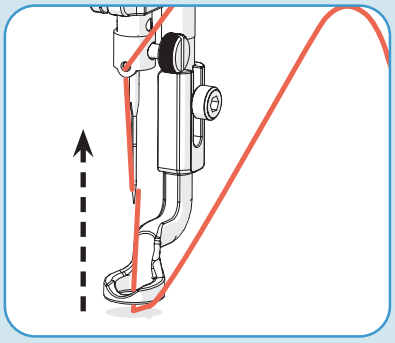

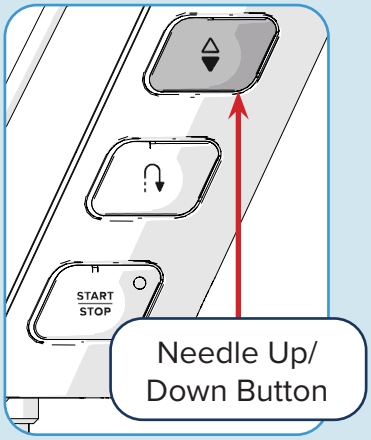

c Continue holding the thread tail and move the fabric away from the stitch. A loop of bobbin thread is pulled up to the surface. Keep pulling until the bobbin tail completely pops out.

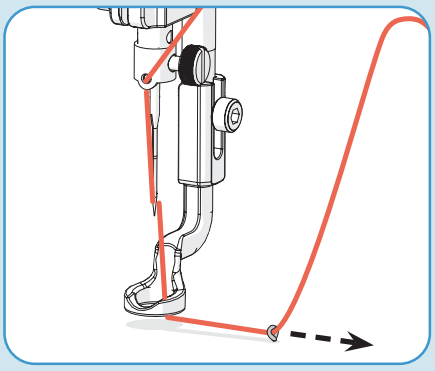

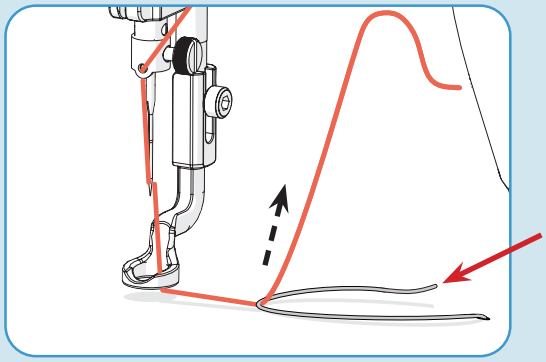

d Gather up both thread tails and move the fabric to line up the needle with the first stitch.

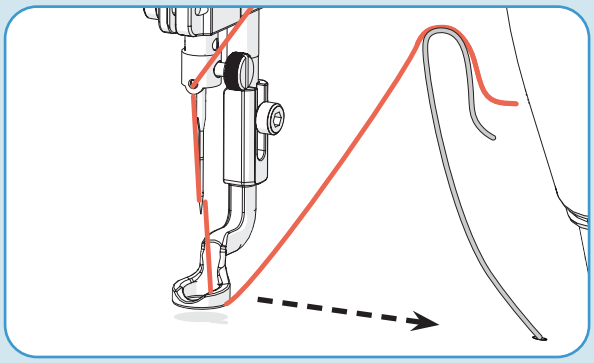

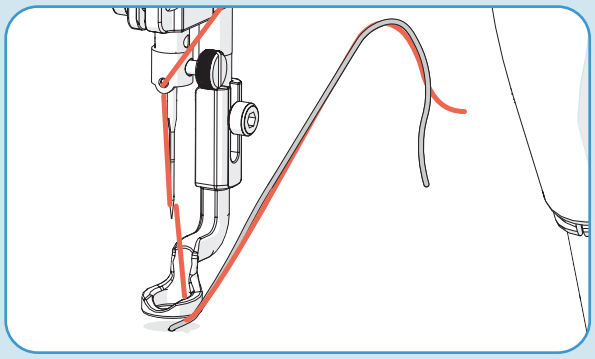

4 Start with a few securing stitches, and then stitch around the edge of your scrap fabric. Push the fabric through the machine with an even and steady pressure. Remove the pins before you sew over them.

Notice how as you change the pace of your pushing, the length of your stitches changes. Because you turned off stitch regulation, the machine moves the needle up and down at the speed it is set to regardless of how fast you move the fabric.

Continue to stitch on the scrap fabric until you run out of space.

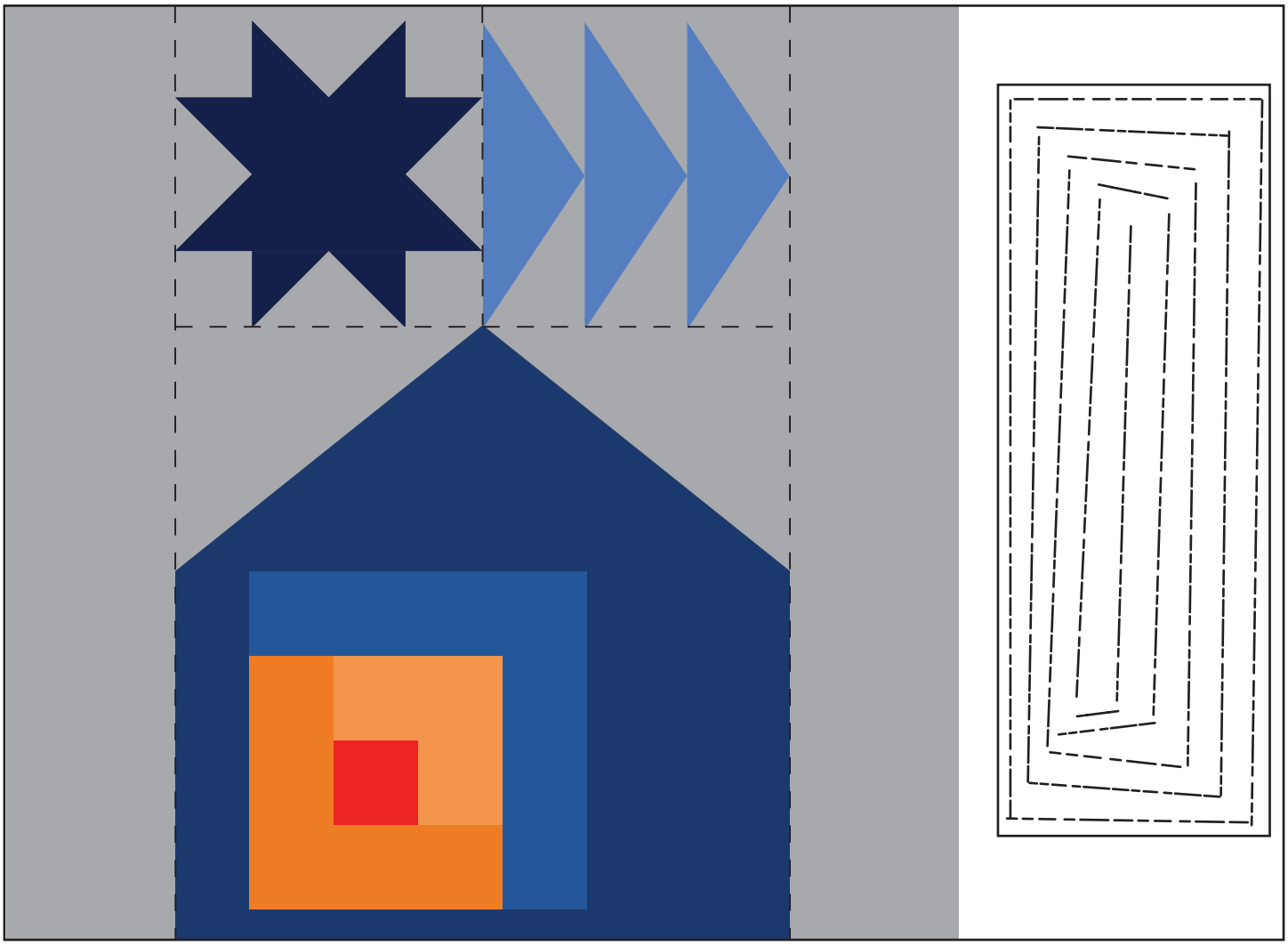

Note: If you find your hopping foot drags on the fabric, then you might have set your foot height too low. Look at the section "Setting Up Quilting Mode" on page 25 and adjust the foot.

5 Once you fill up your scrap fabric with stitches, make a few securing stitches at the end. Next, you need to bring up the bobbin thread again, to make sure it's not in the way as you do more quilting. The steps for pulling up the bobbin thread at the end of stitching are a little different than the steps for pulling it up at the start.

a Push the fabric so the needle is away from the last stitch.

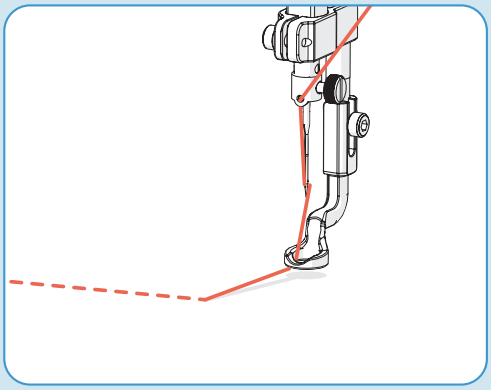

b Hold the top thread to make a loop and return the fabric to the needle.

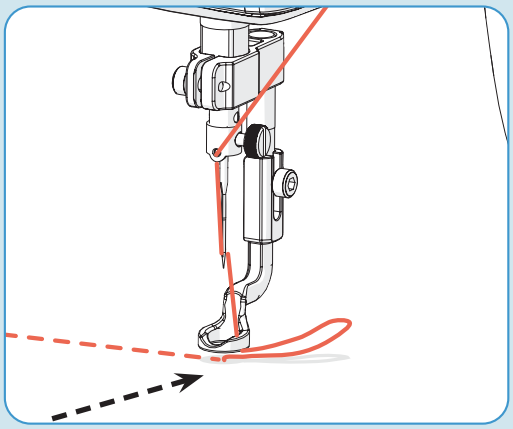

c Still holding the loop, make a single stitch directly over the last stitch. Press the **Needle Up/Down** button twice.

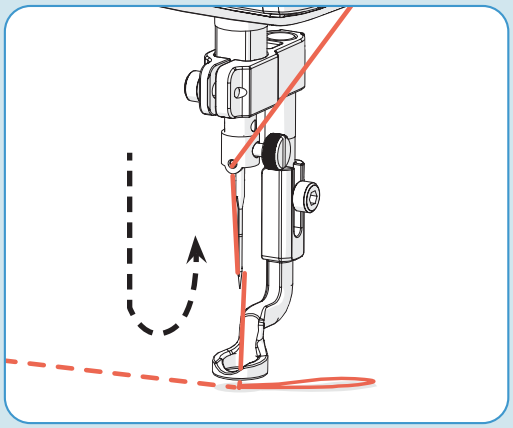

d Still holding the loop, move the fabric away again.

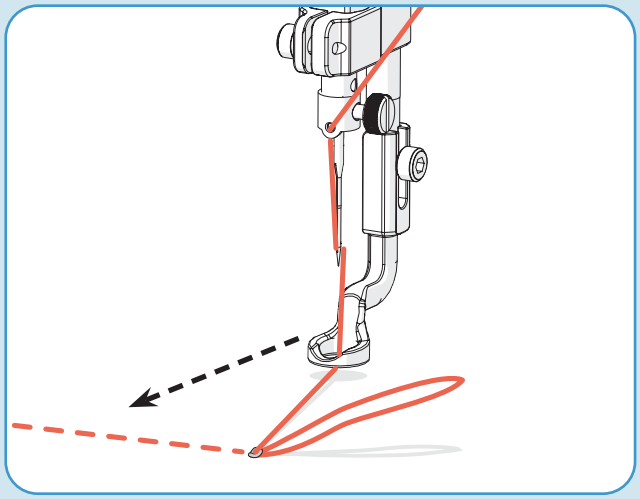

e As you move away, a **loop of bobbin thread** is pulled up. Keep going until the loop is big enough to grab.

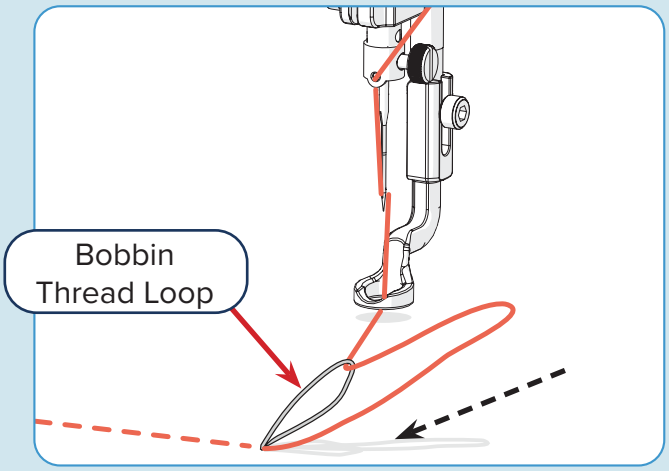

f Trim away all the threads close to the last stitch.

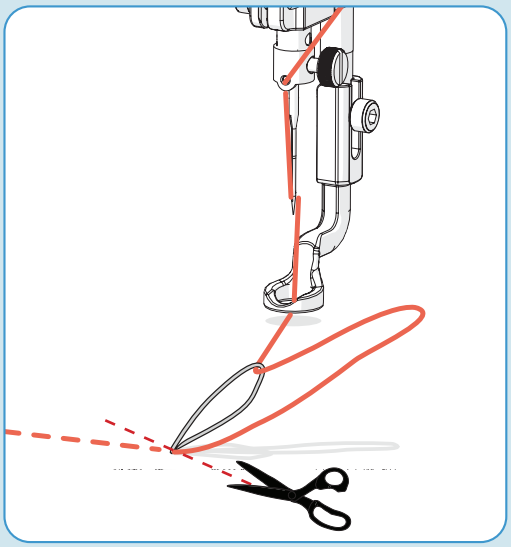

6. Now that you know how to start and end your stitching and what it looks like when you stitch without stitch regulation turned on, it's time to quilt!

EXTRA CREDIT: SHOULD I TACK DOWN MY QUILT EDGES?

Tacking down the edges of your quilt is a normal step when you are quilting on a frame. Tacking down the edges helps to keep your quilt top from shrinking or scrunching up as you fill it in. When you are tacking down the edges, you can use the same size stitches you plan to use for quilting, or you can use a smaller stitch size to hold the fabric in place.

However, sewing the edges of the quilt top isn't always the best option when you are quilting a large quilt off-frame. Sometimes the fabric can be stitched down in such a way that by the time you've worked from the center of the quilt to the edge, the edges end up getting wrinkled or puckered. Basting the layers of the quilt together with basting spray or holding the layers together with pins can be better alternatives for large quilts.

When you're quilting a smaller quilt using the off-frame quilting technique, or when you are using a quilting hoop while off-frame quilting, tacking down the edges can be helpful. Therefore, you'll have to experiment with your quilts and determine which technique works for you with the size of quilts you're making using the off-frame quilting technique.

For this project, it's not necessary to tack down the edges of your quilt top, but you can if you want.

- If you want to tack down the edges of your quilt top, then simply put your needle in the bottom-left corner of your quilt top, pull up your bobbin, and then stitch around the edges. When you're finished, pull up your bobbin again.

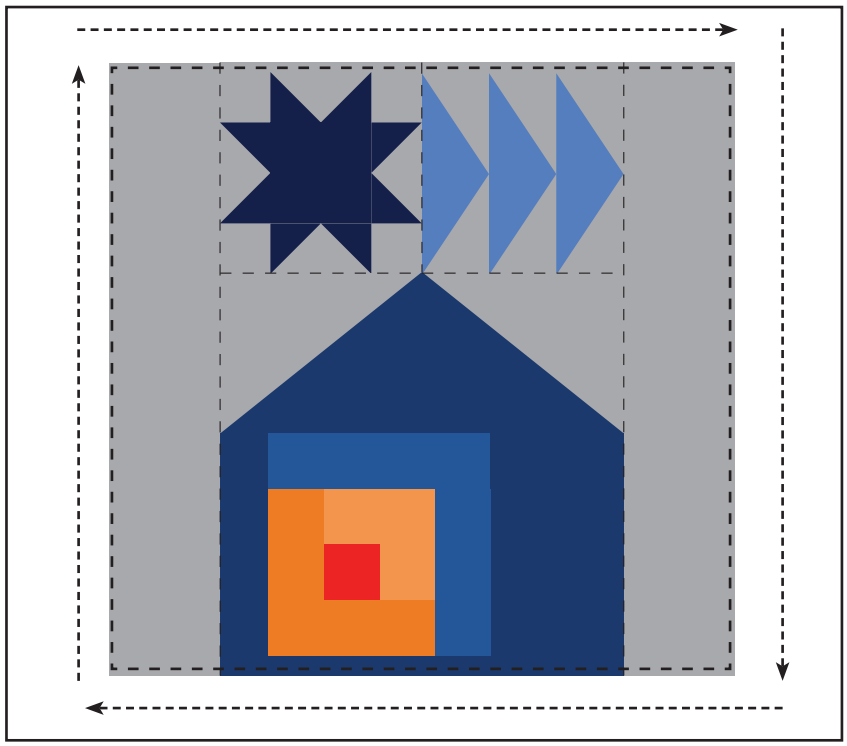

9 Lesson 9: Quilting (With Regulation)

KEY CONCEPT

You can use continuous line designs or motif designs when you quilt. Take your time, and enjoy the experience of moving the fabric around. Be creative and have fun!

It's time to quilt! Not that you haven't been quilting this whole time, as all of these processes are part of making a quilt. But now it's time for the task that people generally think of as quilting: sewing together the layers of fabric in a nifty design.

While you're free-motion quilting, you have a wonderful opportunity to be creative. This lesson provides some ideas of designs. However, you can definitely use whatever designs you want, as it's your project!

Generally speaking, you can quilt in two broad ways: to fill in space and hold the layers together, or to highlight a specific part of the piecing. When you fill in space, you basically ignore any changes in the piecing, and simply repeat a design over and over until the quilt is filled in. This type of quilting is called **continuous line design quilting**. If you are making a block stand out, you use **motif design quilting**, and you'll focus on the shape of the block, or the shapes in the block. It's more likely that your design has more starting and ending points. For this project, the examples mostly show continuous line designs, but a few of the examples are motif designs. As you start your designs, you will make a few **securing stitches**, which are normal stitches that are very close together to help secure your thread.

One common way to quilt blocks is to **stitch in the ditch**, where you stitch along the seams of your blocks. Stitching in the ditch is an easy, attractive way to quilt your layers together, and it has the added bonus of stabilizing your blocks. You can also stitch in the ditch to move along your blocks to get to a new spot without making obvious lines on the pieces.

PRACTICE STEPS

To quilt, you need:

- Your quilt sandwich
- Scissors
- Paper (the notes section in this booklet works)
- Pencil
- Chalk or Fabric Marker
- Spare wound bobbins (optional)

VOCAB REVIEW

Continuous line design quilting: Using designs that repeat and that aren't necessarily connected to what is going on in the blocks. The lines start and end at the edges of the quilt top.

Motif design quilting: Using designs that highlight specific parts of your block, perhaps to showcase a specific piece in the block. The lines start and end where it makes sense on the block.

Securing stitches: Stitches made at the start and end of the design. They are normal stitches, but placed very close together to help keep your stitches from coming out.

Stitch in the ditch: Sewing along the seams of your blocks.

1 Before you start quilting, think about the design you want to use. On the Notes pages (in the back of this booklet), sketch out the design for your quilt top. Decide whether you want to do one design that repeats over the whole quilt, or if you want to make a block stand out.

Note: The images below show some examples of designs you might try. Remember, the example quilter is not you, so feel free to use or ignore any and all of these example designs!

a In the top-half, the example quilter is going to do a few continuous line designs. First, they are going to do a line of "up-loops" and then do a line of "down-loops." Next, they are going to do two lines of "connected, alternating loops." They want to space these four lines so that they fill up all the space on the quilt top from the top of the sandwich until the bottom of the star and flying geese blocks.

b In the leftover left edge, they are going to practice straight lines back and forth. And in the leftover right edge, up and down straight lines.

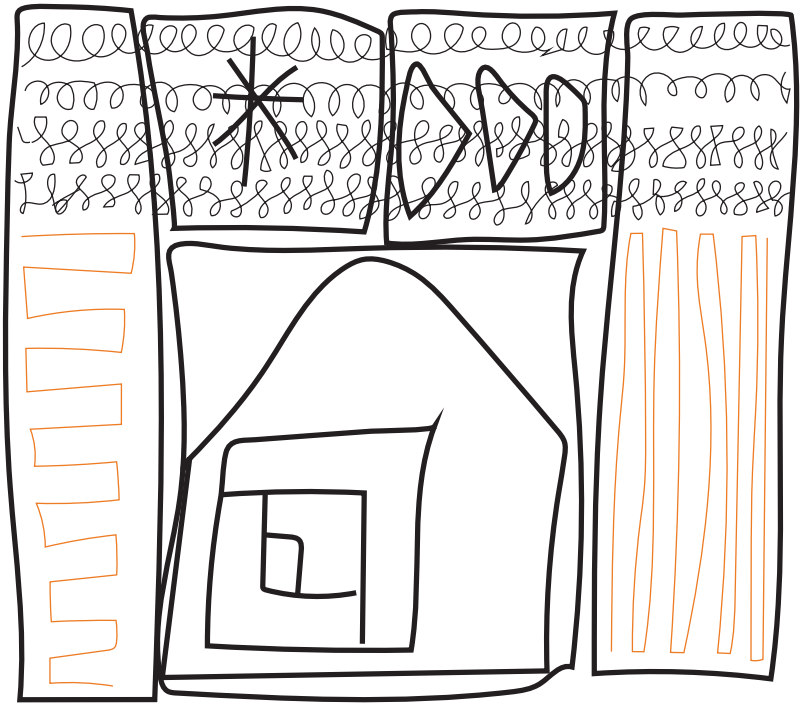

c Finally, they are going to highlight the cabin block in a few ways. The example quilter is going to do diagonal lines in the "sky" of the cabin. They are going to practice a random meander design in the main section of the cabin. In the contrasting colors of the cabin, the example quilter is going to stitch in the ditch around the smaller blocks.

2 Take your quilt top off the Little Rebel. Use a marking tool, like chalk, to sketch out the design in your quilt top. Following the markings is easier than eye-balling the design. As you gain confidence, you can make your designs without marking them.

Remember, though, your marks are just guidelines. Afterwards, you're going to wash the marks off, so if it turns out that your designs don't line up with your markings exactly, it doesn't matter. No one (except you) will ever know!

3 On the Little Rebel, press the **Q button** to turn on stitch regulation.

With stitch regulation on and the foot pedal plugged in, the **Start/Stop** button is disabled. You can either use the foot pedal like normal, or if you want to, you can remove the foot pedal, and only use the buttons on the machine for quilting with stitch regulation.

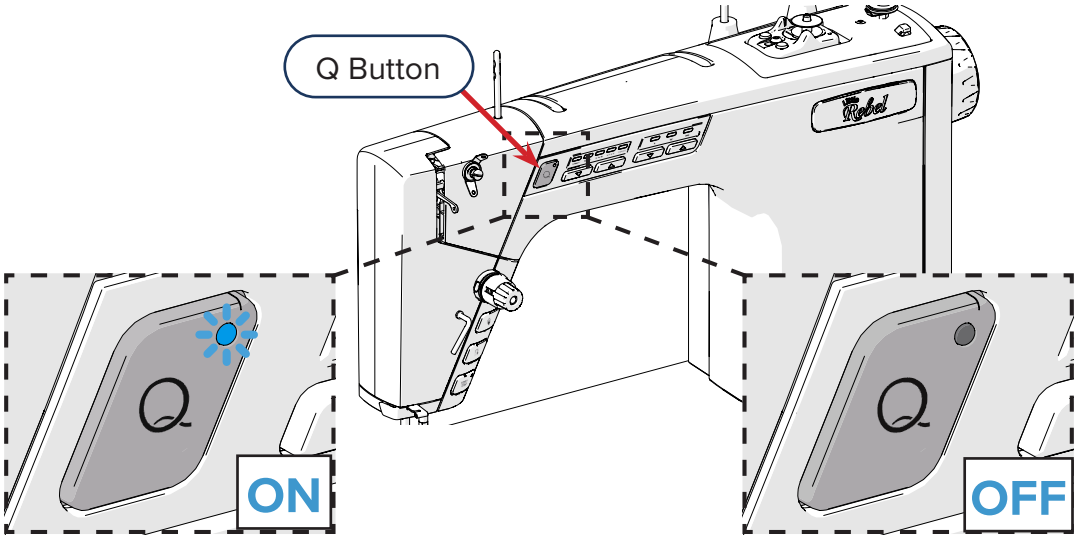

While stitch regulation is on, the speed of the machine is determined by the movement of the fabric over the **fabric sensor**. The speed buttons are disabled. You can still adjust the stitch length by pressing the **stitch length buttons**. The more lights that are on above the stitch length buttons, the smaller the stitches the Little Rebel makes. Or, in other words, the machine uses a higher stitches per inch setting (**SPI setting**).

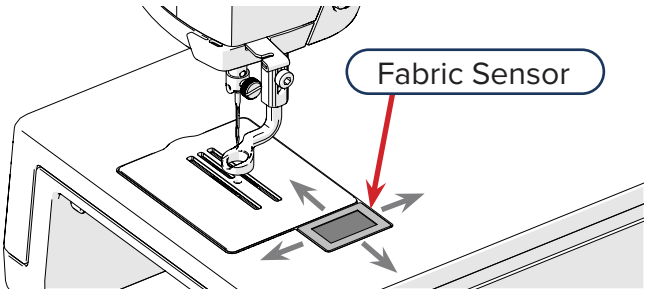

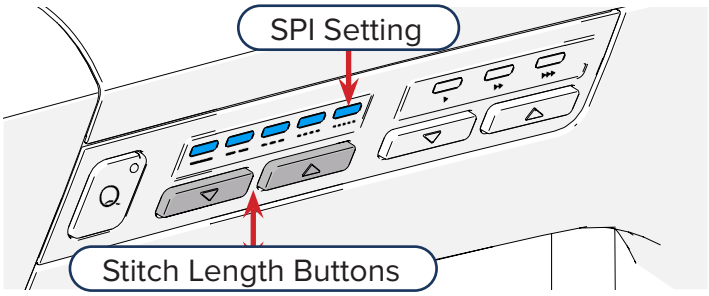

4 Decide what block you want to start with, and think about the path you want to take. Especially if you're doing a motif design, like a random meander, plan your path so that you reach the whole block and don't get stuck in a corner.

Note: If you do get stuck, you can fix it by pulling up your bobbin and cutting the thread.

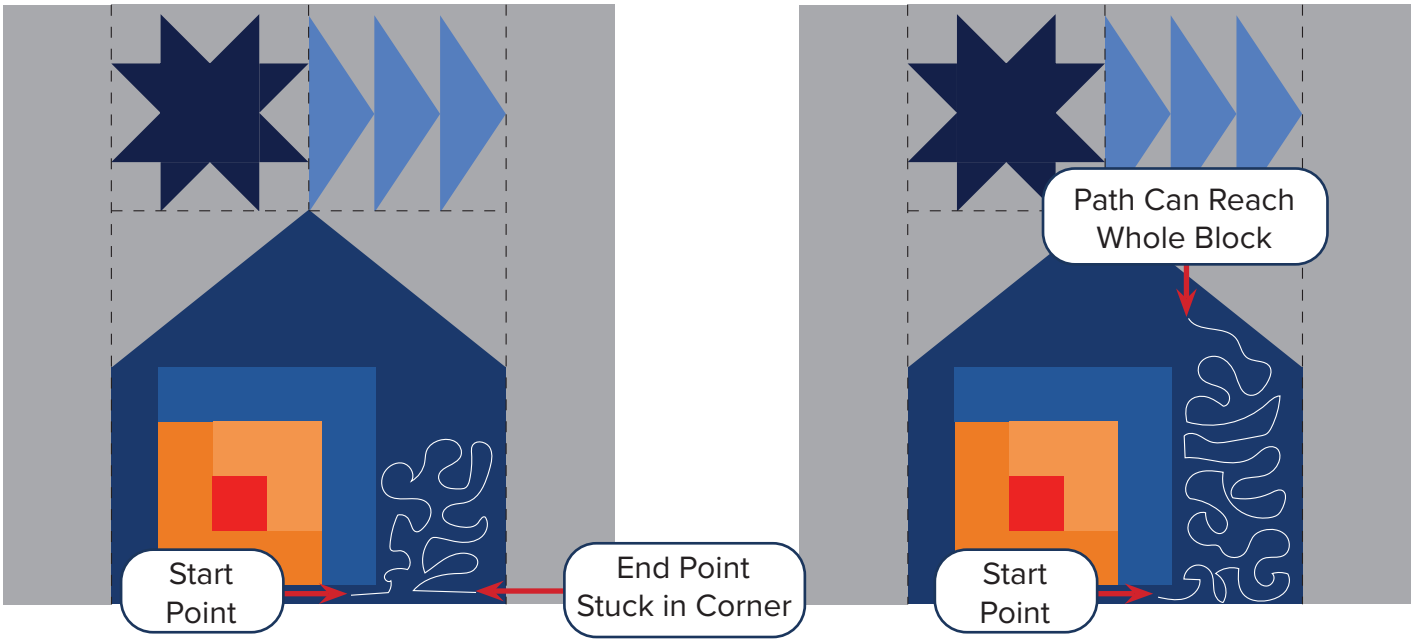

5 Orient your quilt top so that it's easy to start the path you picked. One of the best parts about free-motion quilting is that you aren't restricted to pushing the fabric from the front of the machine to the back.

For example, you can start from the left and go right, or start at the top-right and work your way to the bottom-left, or move your fabric in a swirling motion.

Note: The example quilter is going to start at the top-left of the quilt top. They are going to quilt from the left to the right, then from the right to the left, top to bottom, to practice the four continuous line designs. When they get to the other blocks, the example quilter is going to change the blocks' orientation to what works for their other design choices.

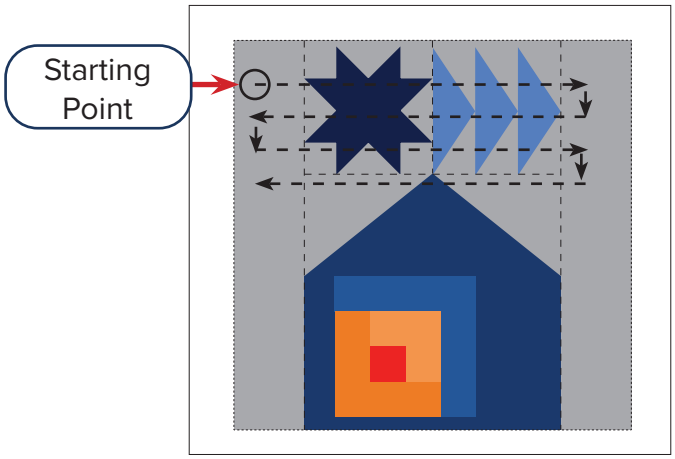

6 Slide your starting point under the needle, and then pull up your bobbin thread using the steps on page 32.

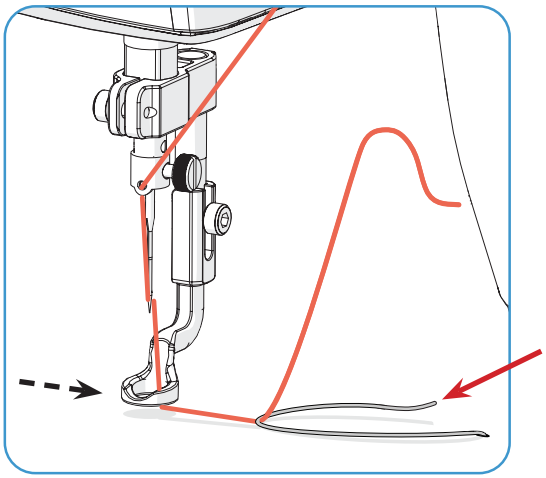

7 Set up your grip on the quilt. In general, place your hands so they make a **triangle** shape, but with your thumbs a few inches apart. As you quilt, the area inside the triangle will be the place you have the most control of your quilting line. You will need to press down a little with your fingertips to move the quilt in any direction you want as you make your design.

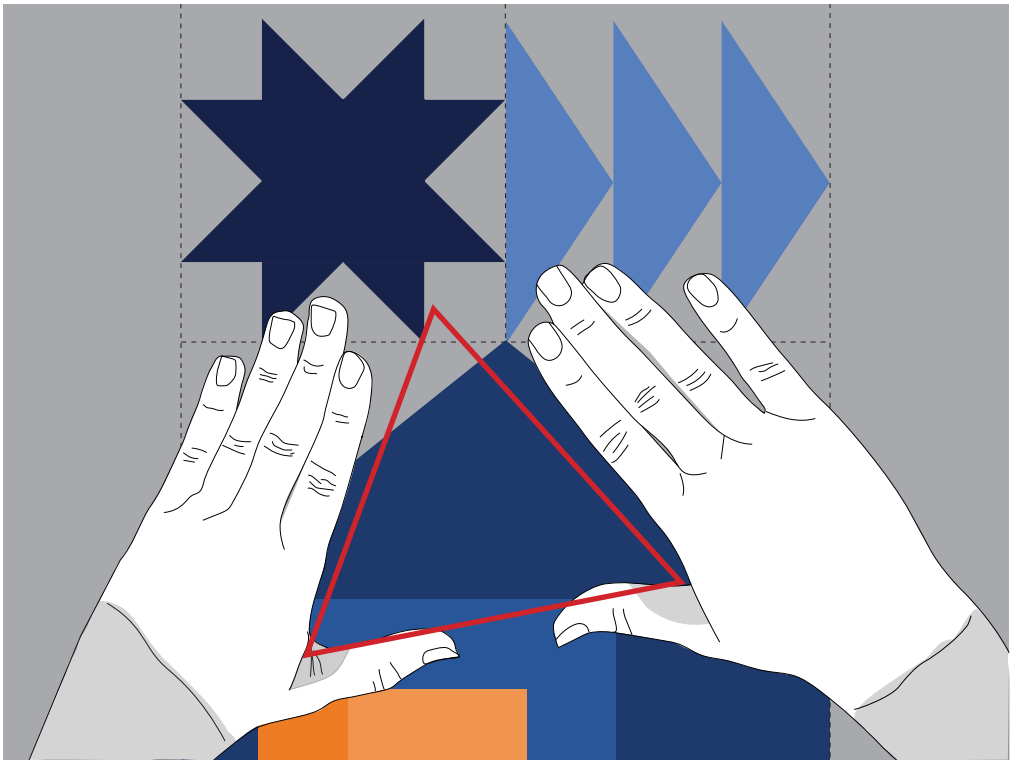

8 Press the **Start/Stop button** (or, if the foot pedal is still plugged in, push the foot pedal down and hold) to begin quilting. First, make a few securing stitches, and then follow the path you drew.

Remember, you are responsible for moving the fabric. The faster you move the fabric, the faster the needle speed. However, if you don't push the fabric around, the machine continues to stitch slowly in the same spot until you press the **Start/Stop** button again (or release the foot pedal, if it is still plugged in). Stitching for a long time in one place can create a knot. Make sure you are pushing the fabric while the machine is started.

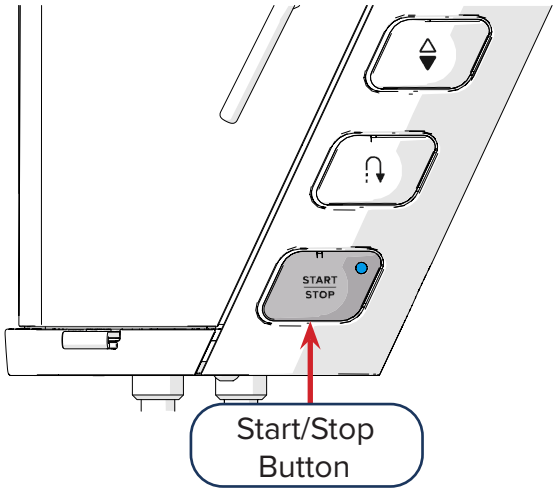

Note: You must move the fabric!

The machine doesn't have the ability to move the fabric in Quilting Mode. If you don't move the fabric, the Little Rebel continues to stitch right where you left the fabric until you stop the machine.

9 When you have filled the area in your triangle, stop the machine and make sure your needle is down. If needed, press the **Needle Up/Down** button to get the needle into the down position. Move your hands so your triangle is over a new empty part of your quilt, and then start quilting again.

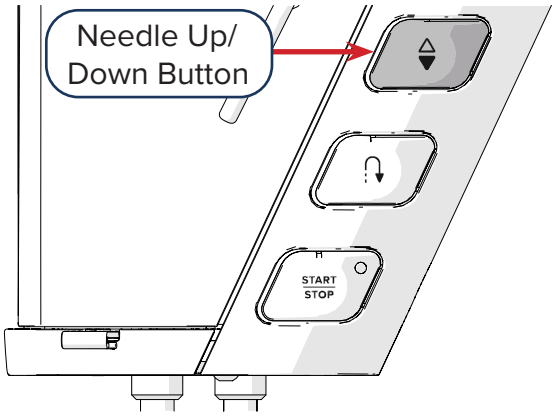

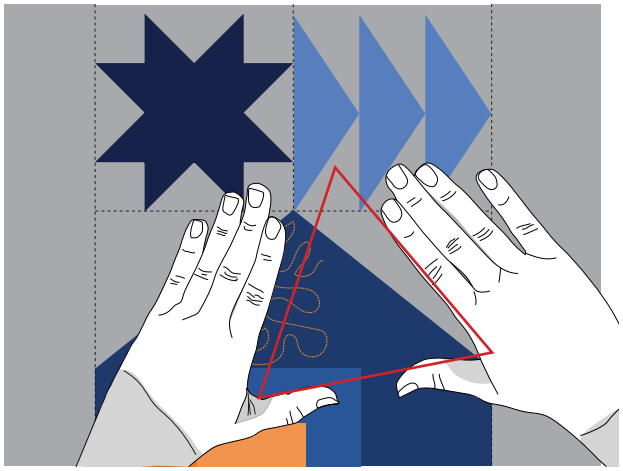

10 After you finish quilting a block, make a few securing stitches, and then pull up your bobbin thread using the steps on page 35.

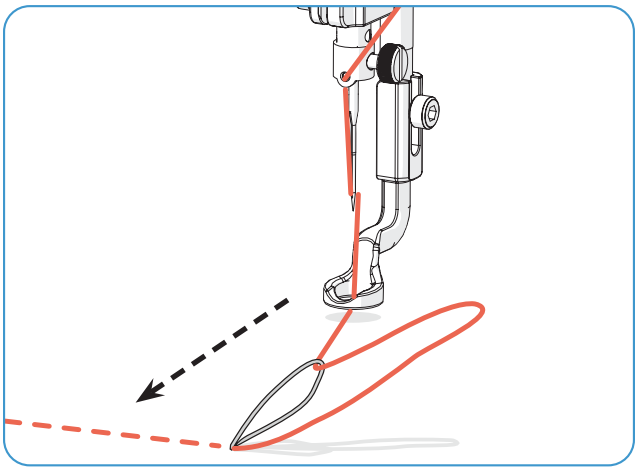

11 Continue quilting until all of your blocks are finished. Remember, this is the fun part, so if your hands are tired or you need to pause, that's okay!

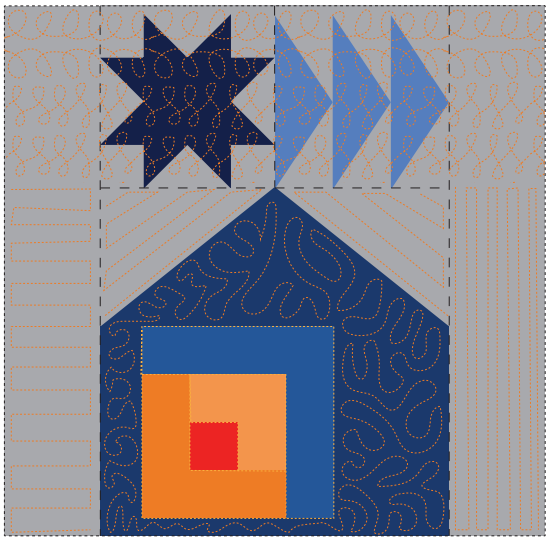

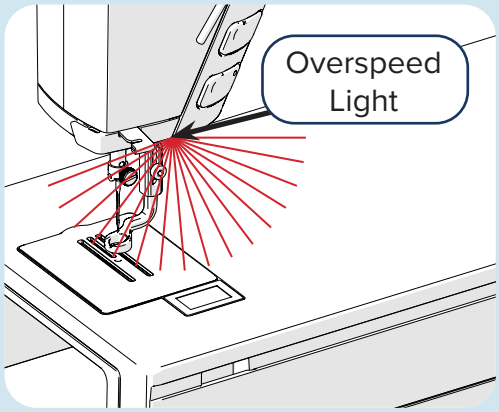

THE OVERSPEED LIGHT

While you have the machine in Quilting Mode with stitch regulation turned on, the **overspeed light** might activate during your quilting session. The light turns on to indicate that the fabric is moving over the sensor too quickly for regulated stitching to function optimally. The light stays on until the movement slows down enough that the stitch regultation and sensor can again work at a high quality.

Note: This warning applies whether you are quilting on frame (where the machine's movement is too fast) or you are quilting off frame (where the fabric's movement is too fast).

10 Lesson 10: Finishing Your Project

KEY CONCEPT

To finish the pillow project, add the other side of the pillow to your quilt sandwich, stuff the pillow, and hand sew the last bit closed. Take the time to share or display your project, as you put lots of work into it!

To complete your project, you need to switch the Little Rebel back to Sewing Mode.

Next, cut a piece of fabric the right size to be the back of the pillow, and attach it to the quilt sandwich. Then, stuff the pillow, and finally, hand sew the edge shut. Yes, there is something that the Little Rebel just refuses to do (living up to its name!), and that is invisibly sewing a seam on the outside of a project.

Once you've finished your pillow, you'll have the growing confidence to make anything you want with the Little Rebel machine, whether it's in Sewing or Quilting Mode.

Note: If you'd prefer, you can make this project into a wall hanging instead. To make a wall hanging, follow steps 1–8. Skip step 9, and then follow step 10.

PRACTICE STEPS

To finish your project, you need:

- Your quilted quilt sandwich
- Fabric for the second backing, 15 x 12¼ inches
- Little Rebel in Sewing Mode
- Pins
- Stuffing
- Hand needle
- Scissors (or rotary cutter and mat) T-handle Allen wrench 3 mm (came with machine)

1. Switch the Little Rebel back to Sewing Mode. Follow the steps in "Lesson 2: Setting Up Sewing Mode" on page 8.

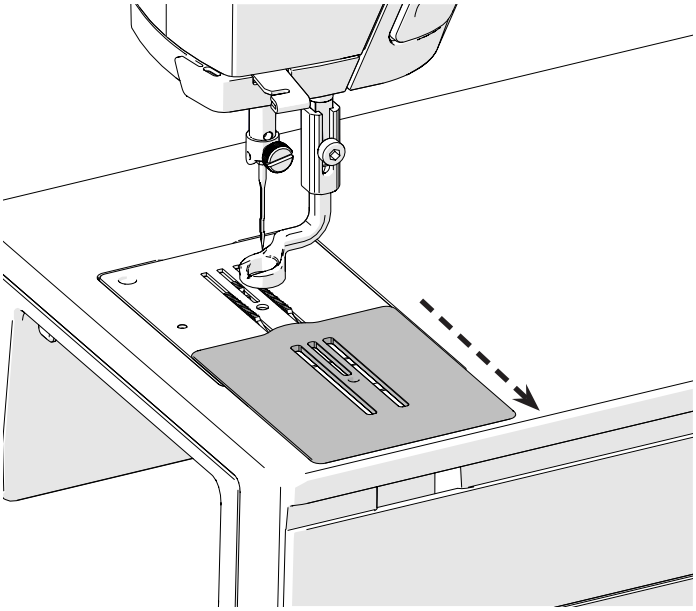

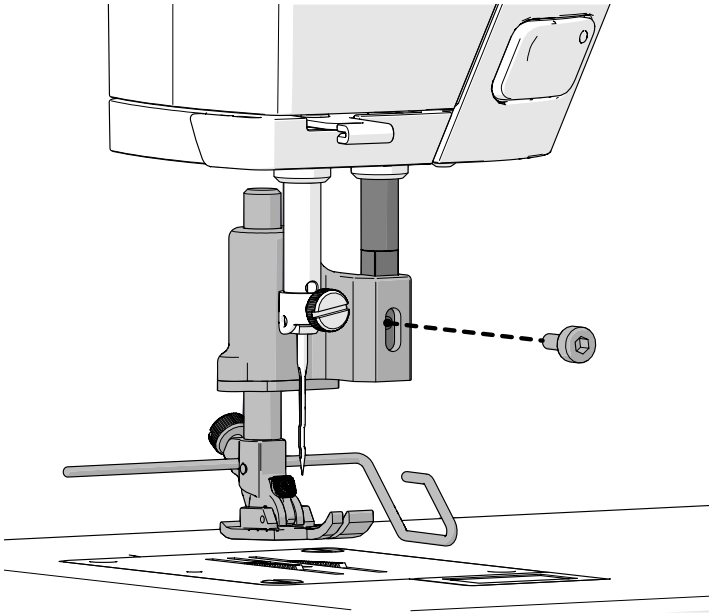

2 Cut down the backing and the batting on your quilt sandwich to be the same size as your quilt top.

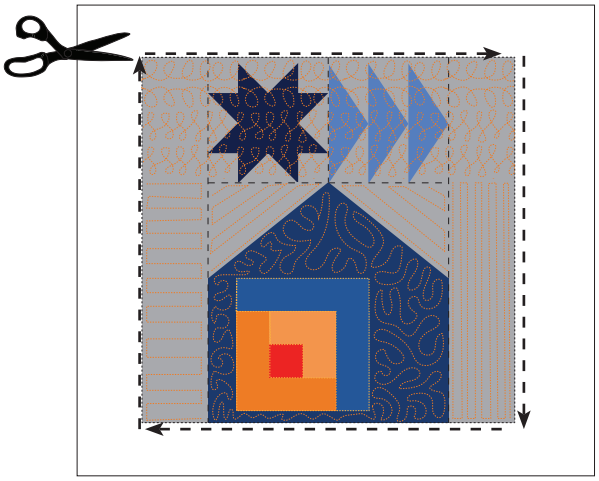

Note: After you cut the backing and batting down, take a moment to wipe off any markings that are leftover from when you marked out your designs.

3 Measure and cut out the **back of your pillow** the same size as your quilt top, 15 x 12¼ inches.

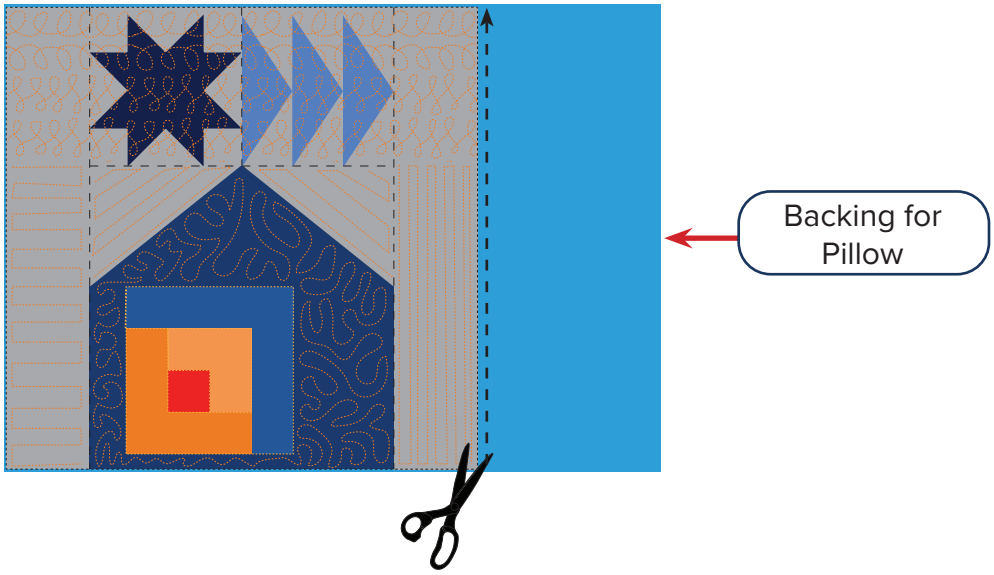

4 Pin the back of your pillow to your quilt sandwich, right sides together.

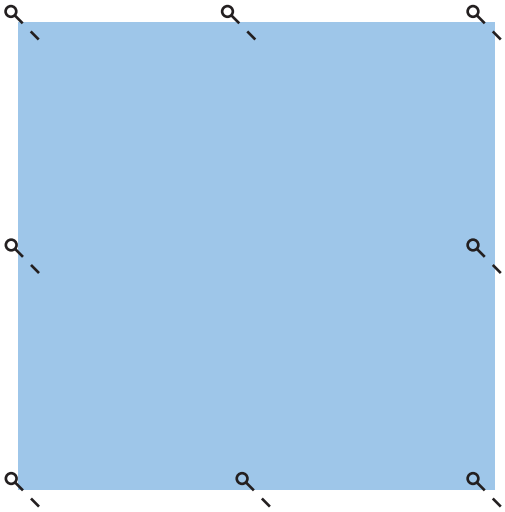

5 Stitch three edges of the pillow together, using a 1/4 inch seam allowance.

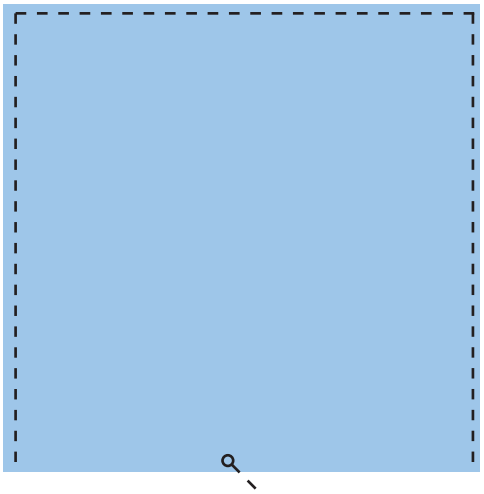

6 For the fourth side, stitch the edges of the pillow together, leaving about **2 inches of open space** so you can turn your pillow out and stuff it.

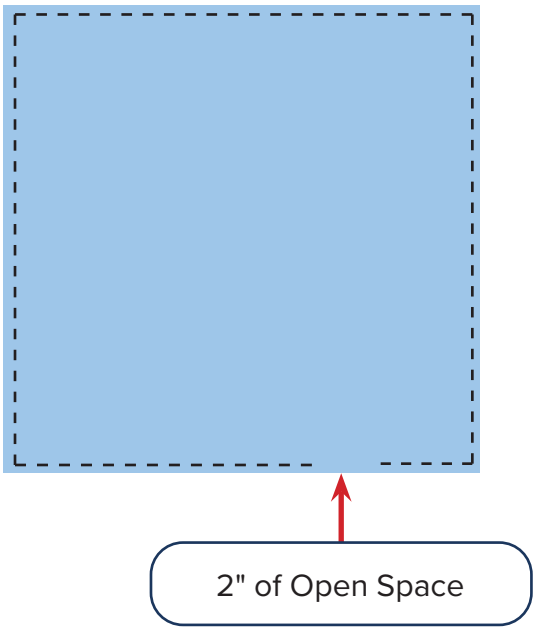

7 Trim off the corners without cutting the seams. This is an optional step, but doing so does make the finished project neater.

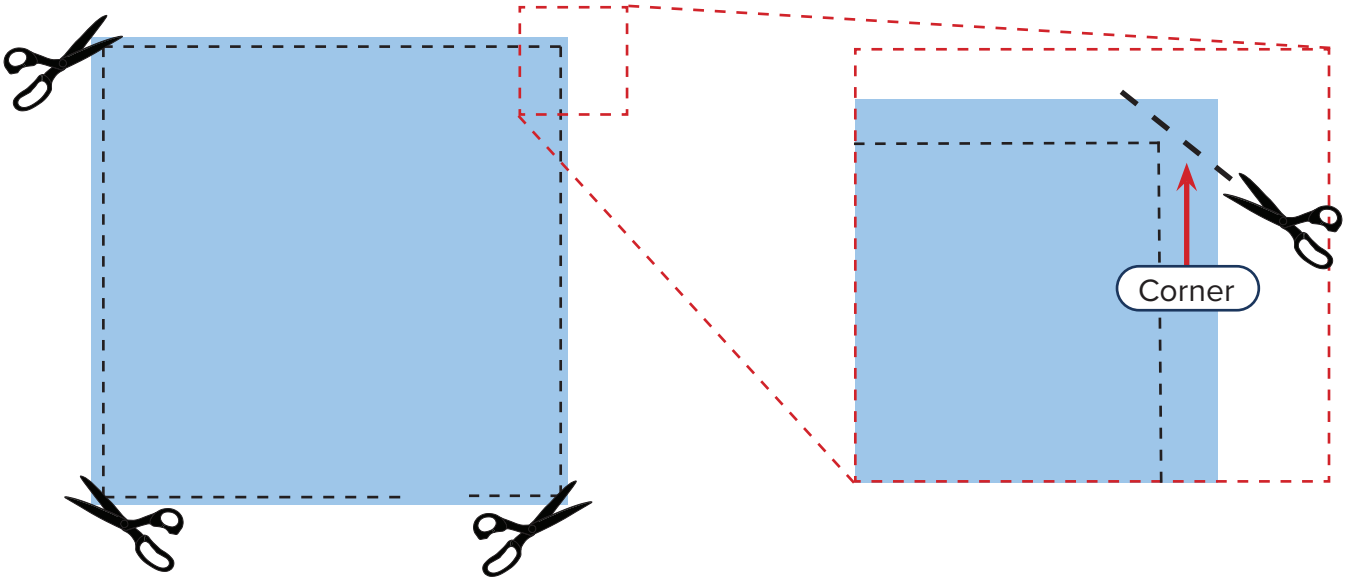

8 Next, flip the pillow so the right sides are on the outside. Gently push the corners of the pillow until they are fully turned out. **Tip:** Use the small end of a wooden spoon to push the corners.

9 Stuff the pillow to your desired firmness. **Tip:** Use the small end of a wooden spoon to get the stuffing into the far corners of the pillow.

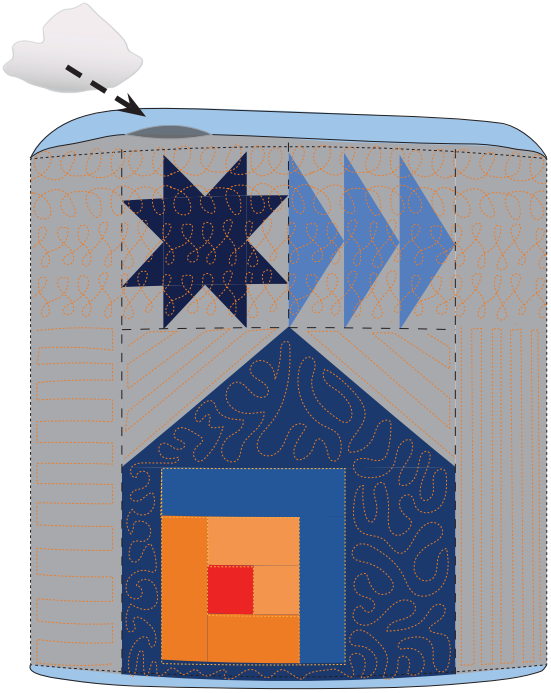

10. Use a blind stitch (also called an invisible stitch, a slip stitch, or a ladder stitch) to hand sew the hole in the last edge. This lesson isn't a tutorial for hand sewing, but the basic idea of the blind stitch is that you:

   a. Turn in the unfinished edges of the fabric until they match your seam.

   b. Pin the edges to hold them.

   c. Hide the knot in your thread by starting the stitch in between one of the folds.

   d. Stitch back-and-forth across the opening, going into the fold each time. Don't grab the outside of the fold with any of your stitches.

   e. The stitches look like a ladder when you're finished. Remember to tie off the thread with a knot.

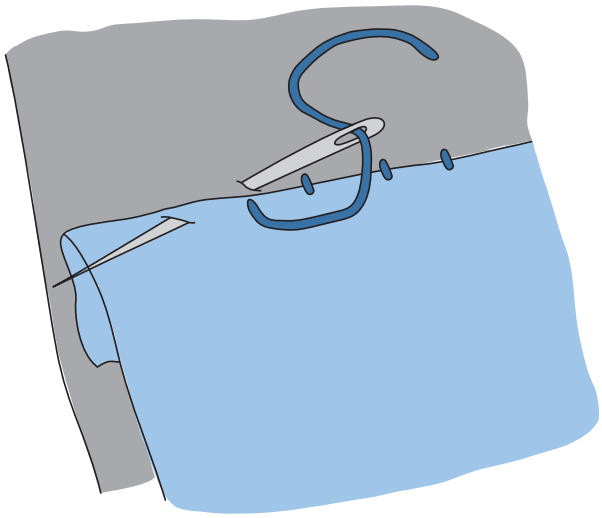

Congratulations! You've created your first project with the Little Rebel! Now you know how to put the machine into Sewing Mode and Quilting Mode, cut your pieces with a seam allowance, piece your blocks, create a quilt sandwich, start and end your designs, quilt using the off-frame technique, and finish the edges of your project.

Go have a little rebellious quilting fun!

NOTES

NOTES

NOTES

Copyright © 2026 Grace Company. All rights reserved. Grace Company reserves the right to make improvements and changes to the product described in this publication at any time and without notice, and may revise this publication occasionally without notice.

Grace Company provides this publication “as-is.” While every attempt at accuracy and clarity has been made in the preparation of this manual and its representation of the product, the publisher and author assume no responsibility for errors, omissions, or any damages as a result of said errors or omissions.

All brand names, publishing activities and trademarks used in this publication are the trademarks, service marks, or trade names of their respective holders.

First Published: September 22, 2023

Last Updated: February 26, 2026

Grace

COMPANY

www.graceframe.com
1-801-485-6688