The Hummingbird
Free Motion Hoop

ASSEMBLY AND USE INSTRUCTIONS

Included Parts & Tools

Mat 51" x 27"

HBF-08-19081

Side Rail (x2)
(shipped in rolled mat)

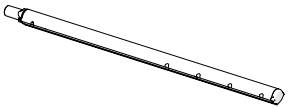

HBF-09-19318

Front Rail
(shipped in rolled mat)

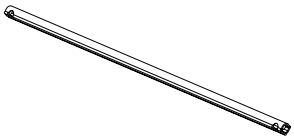

HBF-05-19085

Take-Up Rail
(shipped in rolled mat)

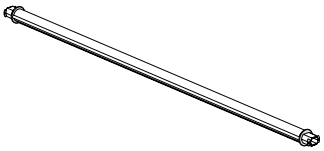

HBF-09-19313

Front-Left Corner

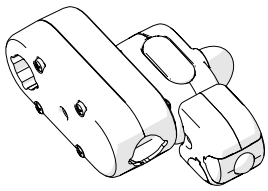

HBF-09-19326

Front-Right Corner

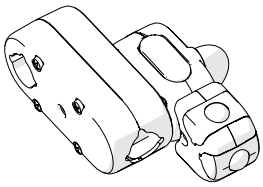

HBF-09-19327

Back-Left Corner

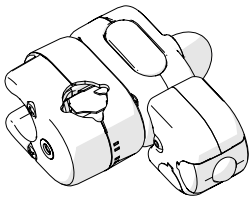

HBF-09-19328

Back-Right Corner

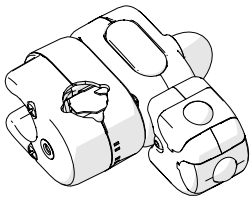

HBF-09-19329

Fabric Clamp (x4)

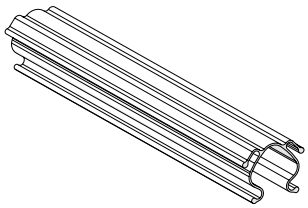

HBF-05-19082

Side Fabric Clamp (x2)

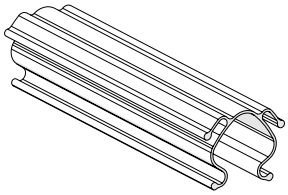

HBF-05-19083

Hardware Box

SBHCS
M4 x 35 mm (x2)

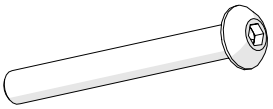

HDW-03-14738

SBHCS
M4 x 13 mm (x2)

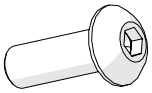

HDW-03-19312

Allen Wrench 2.5 mm

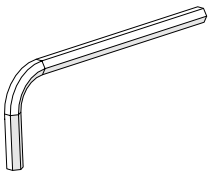

HDW-03-10165

Elastic Clips (x6)

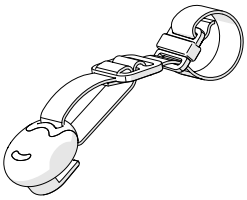

HBF-09-21728

Placement Template

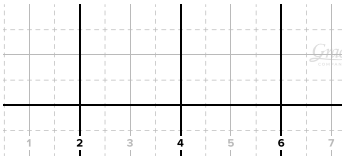

MQF-08-18772

Contents

Included Parts & Tools....1
Get Started....2
Task 1 - Measure Your Sewing Machine....2
Task 2 - Attach the Back Corners....3
Task 3 - Attach the Front Rail to the Side Rails....5
Task 4 - Set the Hoop Around Your Machine....7
Task 5 - Install the Take-Up Rail....10
Task 6 - Adjust the Take-Up Rail Height....11
Task 7 - Prepare Your Machine for Quilting....14
Task 8 - Prepare Your Quilt Sandwich....15
Task 9 - Attach Your Quilt....16
Task 10 - Test Your Fabric Tension....19
Task 11 - Mark Your Quiltable Area....20
Task 12 - Hold Excess Fabric Out of the Way....21
Task 13 - Learn to Start & End Your Stitching....22
Task 14 - Set Up the Next Zone....25
Task 15 - Store the Hoop....28
Additional Resources....29
Design Tracing Paper....30
Placement Template....31

Get Started

Welcome to your Hummingbird hoop and the world of quilting! We are pleased to introduce you to the newest part of your quilting setup. This hoop has been specifically designed to help you create quality products in a small space.

This manual explains how to assemble your hoop out of the box, how to quilt using your new hoop, and how to store your hoop for later.

First, you will assemble your hoop into a rectangle that can hold your quilt fabric taut while you stitch. Then you will create a “quilt sandwich” out of your quilt top, batting, and backing. You’ll then divide the quilt sandwich into sections (zones) so you can focus on stitching one part of your quilt at a time. Finally, you can move and store your hoop when it’s time to switch to sewing.

Thank you again for choosing us to help with your quilting projects.

- Grace Company

Task 1 - Measure Your Sewing Machine

Parts & Tools Needed:

Sewing Machine (not included)

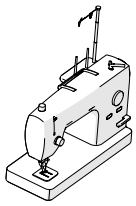

Ruler or Measuring Tape (not included)

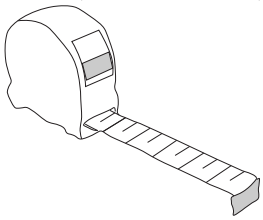

Instructions:

Different machines have different bed lengths. The Hummingbird hoop accounts for this variance by being able to change the length of the hoop. Before you assemble your hoop, you need to know the length of your machine’s bed.

© Grace Company 2025

1 Measure the length of your machine's bed and write down the number.

Note: You need to measure the **full bed length**, not just the **throat** length. You must also include any **chin** length your machine might have.

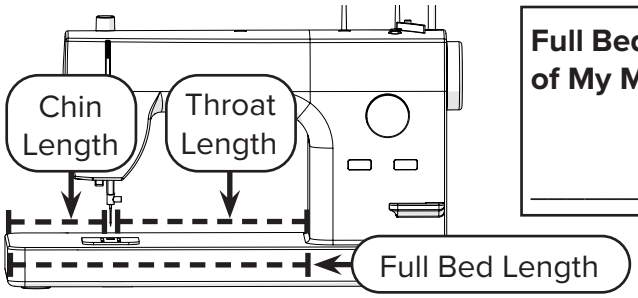

Full Bed Length of My Machine:

_____ inches

Task 2 - Attach the Back Corners

Parts & Tools Needed:

Side Rail (x2)

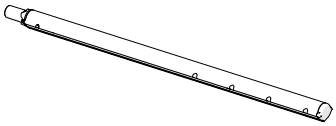

Back-Left Corner

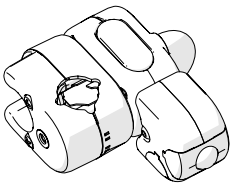

Back-Right Corner

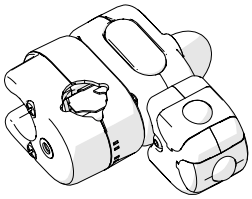

SBHCS M4 x 13 mm (x2)

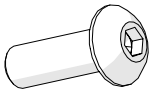

Allen Wrench 2.5 mm

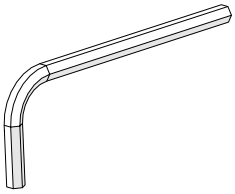

Instructions:

The back corners hold two of the wheels and have a spot for the take-up (back) rail to rest. To attach the back corners to the side rails:

1 For one of the **side rails**, slide the **back-left corner** onto the rail.

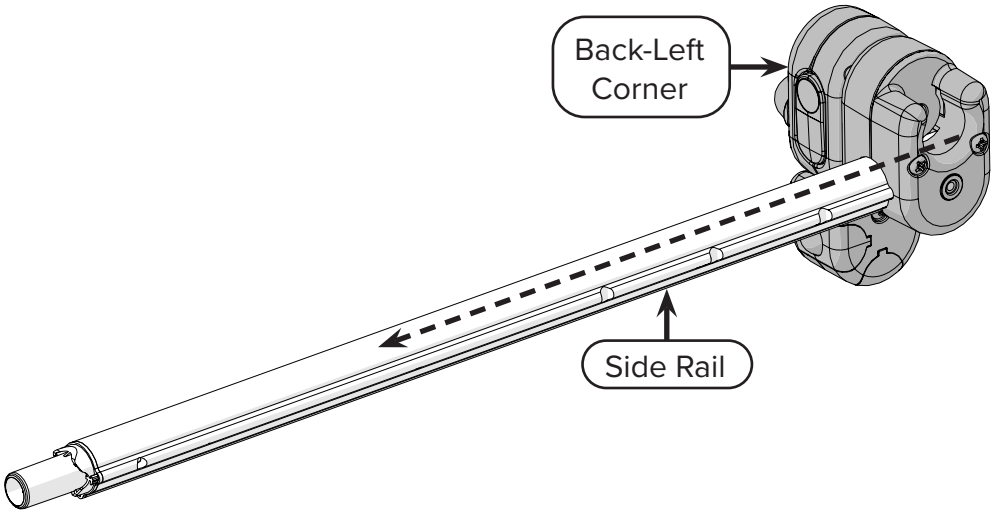

2 Using the table below and the measurement you took in Task 1, determine which **notch** on the side rail sets the hoop to the right size for your sewing machine. **Note:** Use the same notch choice for each side rail.

Length of Machine's Bed	Rail Notch to Use
9 in. or less	D (closest to middle)
9 ⅛ in. to 11 in.	C
11 ⅛ in. to 13 in.	B
13 ⅛ in. to 15 in.	A (furthest from middle)

3 Slide the back-left corner along the rail until the correct **notch** lines up with the **screw hole**. When the edge of the corner is on the **line for the letter** (but you can still see the letter) then the screw hole is aligned with the notch.

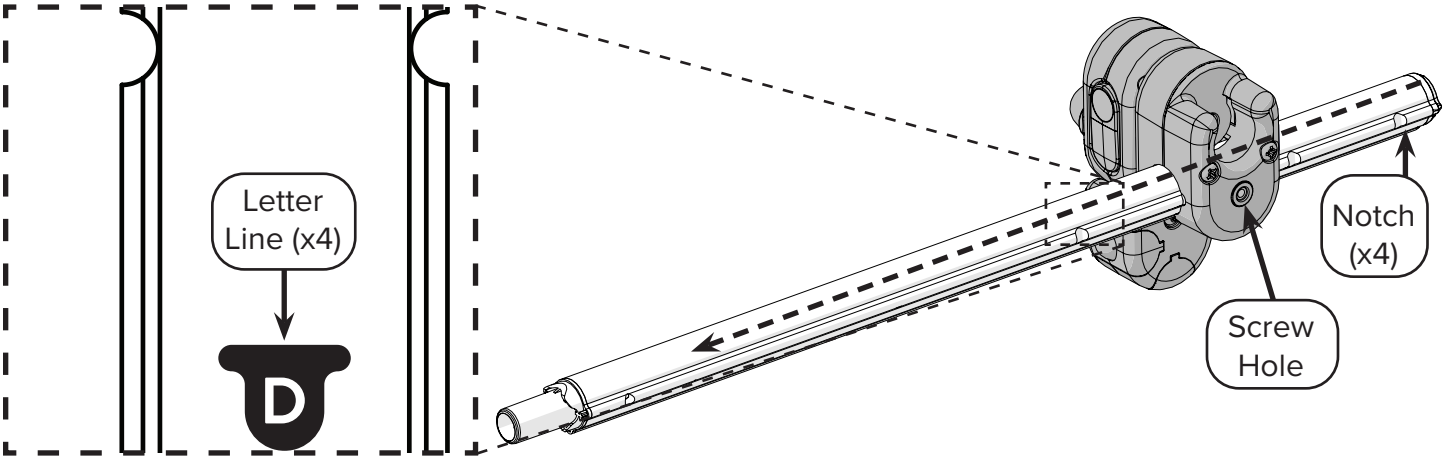

4 Use the 2.5 mm Allen wrench to tighten an **M4 x 13 mm SBHCS** in the screw hole to hold the corner in place.

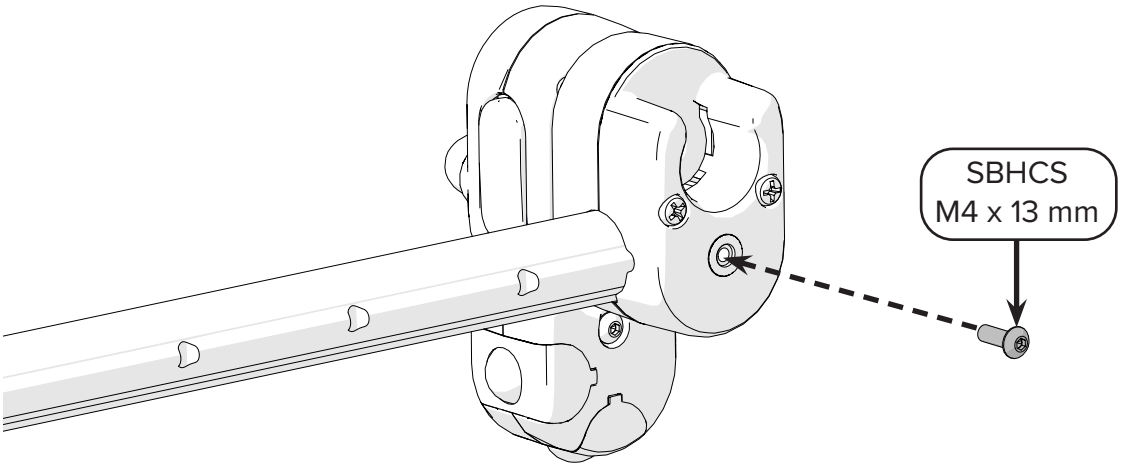

© Grace Company 2025

5 Repeat steps 1–4 with the other **side rail** and the **back-right corner**.

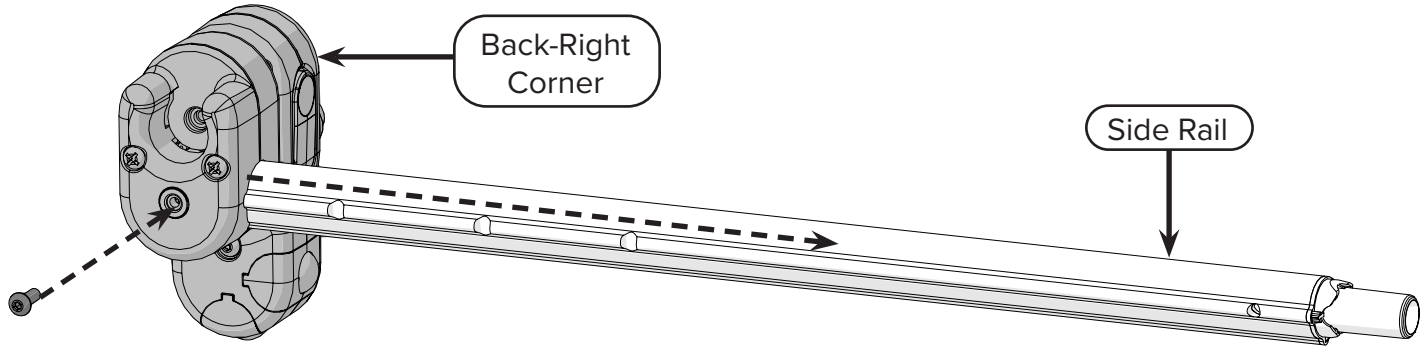

Task Result: You have assembled the **right side rail** and the **left side rail**.

Note: Remember that you need to set the corners on the notches that work for *your* machine. It might not exactly match the example image.

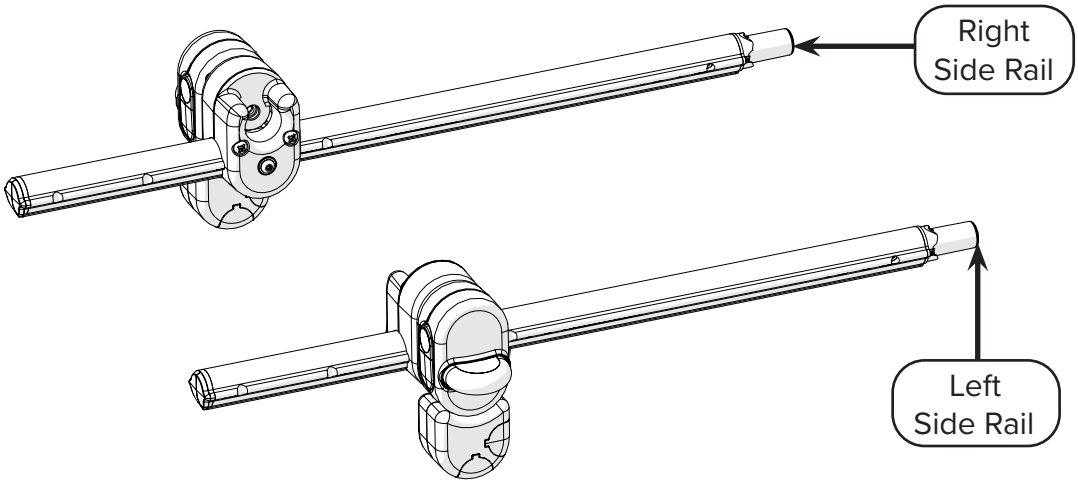

Task 3 - Attach the Front Rail to the Side Rails

Parts & Tools Needed:

Assembled Side Rail (x2)

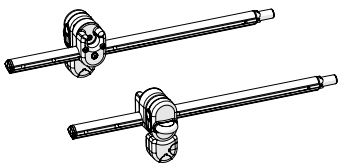

Front Rail

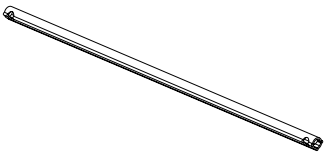

Front-Left Corner

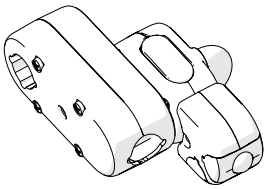

Front-Right Corner

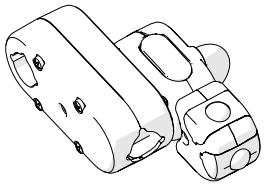

SBHCS M4 x 35 mm
(x2)

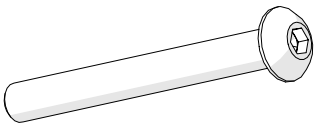

Allen Wrench 2.5 mm

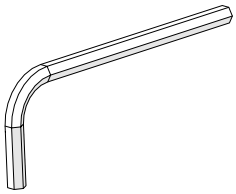

Instructions:

To attach the front rail to the side rails:

1. Slide the **front-right corner** onto the **front rail,** in the hole on the same face as the **screw heads**.

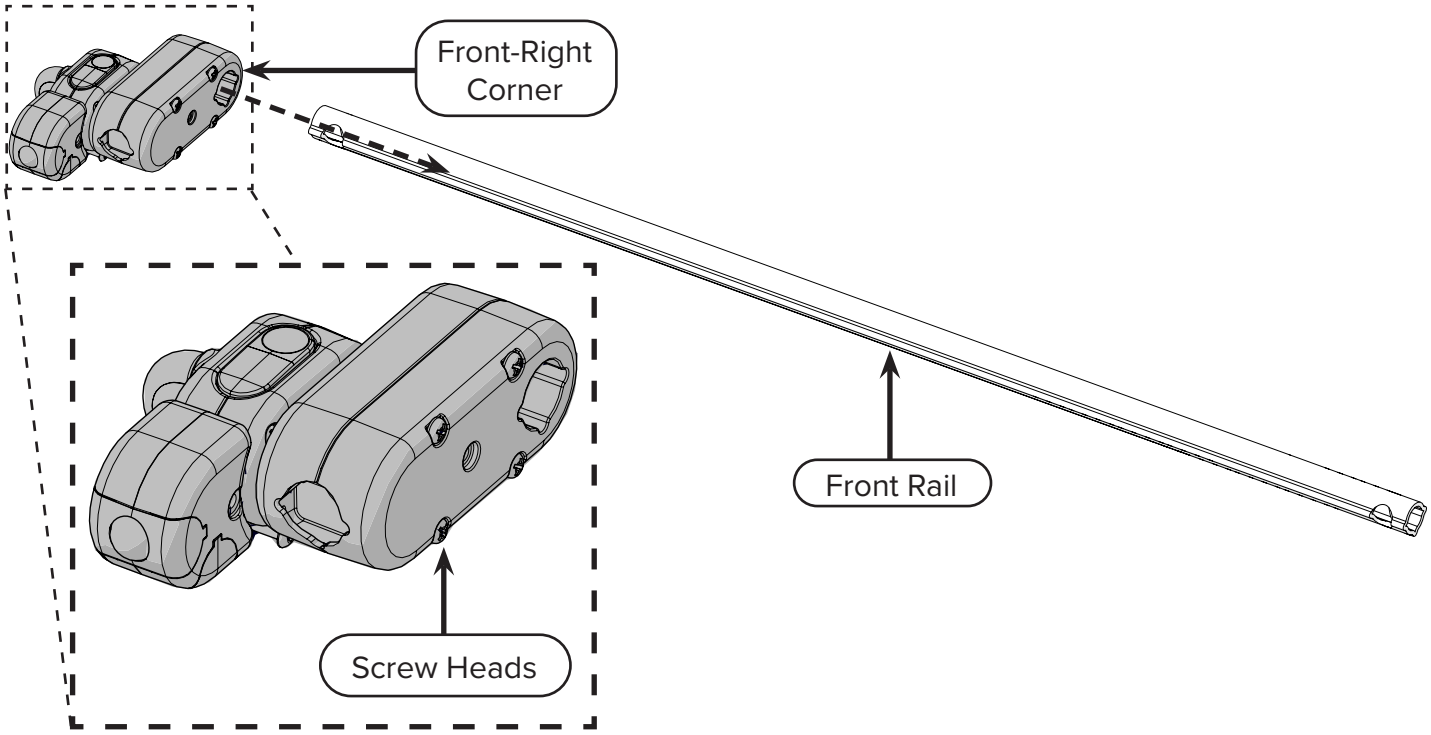

2. Slide the **right side rail** into the front-right corner, making sure the **back corner's wheel case** is on the same side of the rail as the **front corner's wheel case**. Line up the **screw hole** in the side rail with the **screw hole** in the front-right corner.

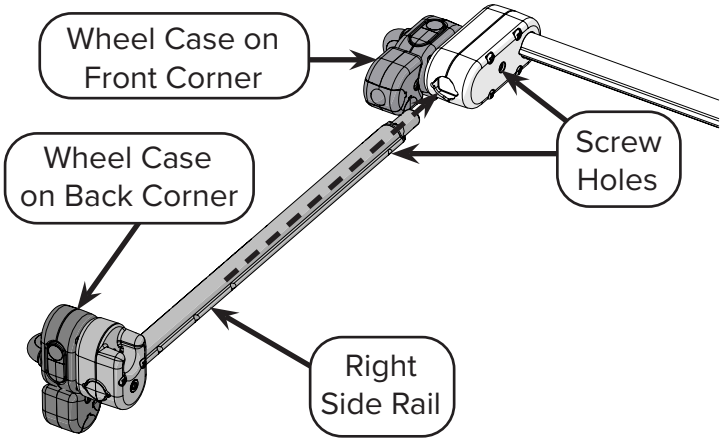

Note: You need to get the **cap** on the side rail into the **hole** in the front rail. If the screw holes aren't lining up, it's probably because the cap isn't far enough into the hole. **IMPORTANT:** In the image below, the front corner is hidden, so you can see what is going on, but *do not* take apart your hoop!

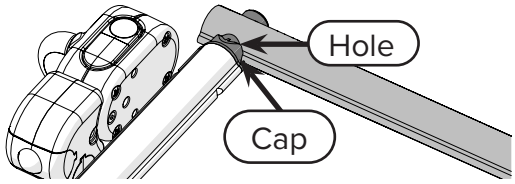

© Grace Company 2025

3 Secure the front rail to the side rail using the Allen wrench and an **M4 x 35 mm SBHCS**.

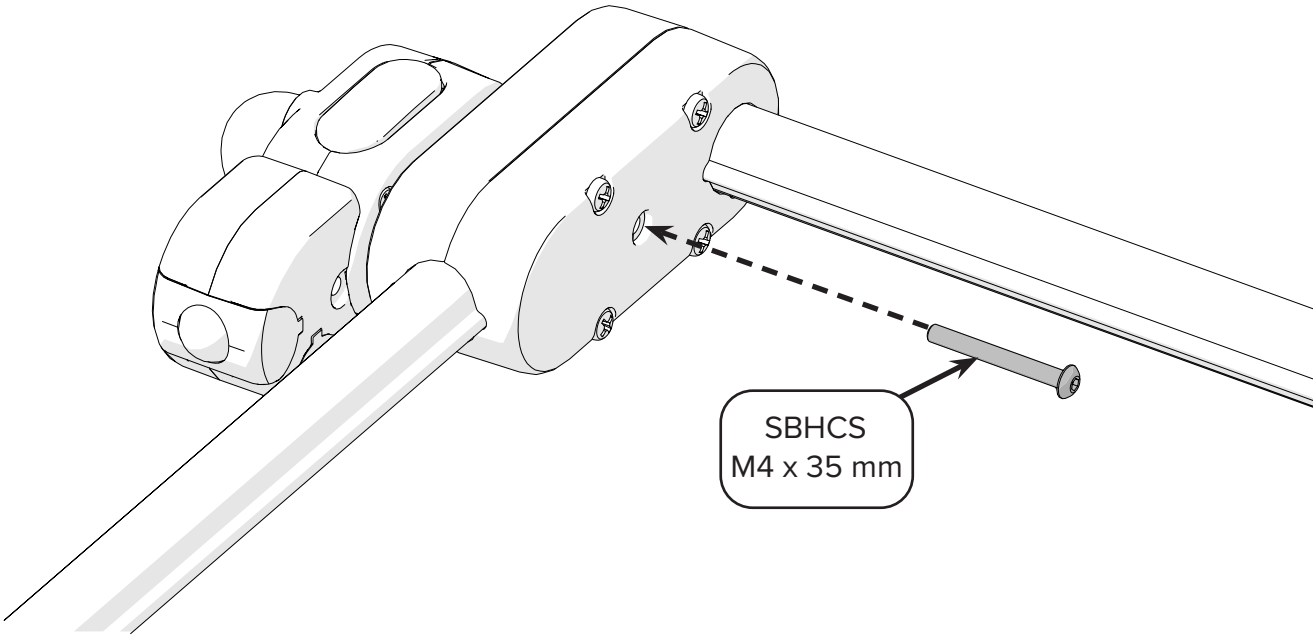

4 Repeat steps 1–3 with the other side of the front rail, the **front-left corner**, the **left side rail**, and another **M4 x 35 mm SBHCS**.

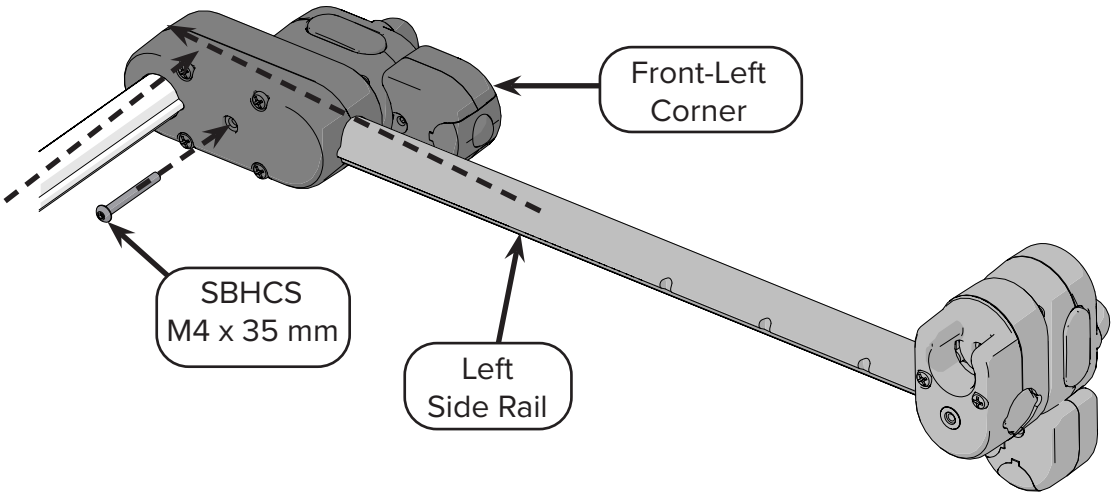

Task Result: You've attached the sides to the front of the hoop.

Task 4 - Set the Hoop Around Your Machine

Parts & Tools Needed:

Mat

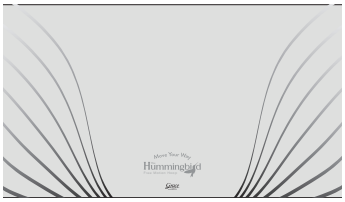

Assembled Hoop

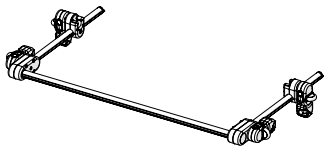

Sewing Machine
(not included)

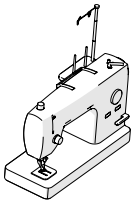

Work Surface
(not included)

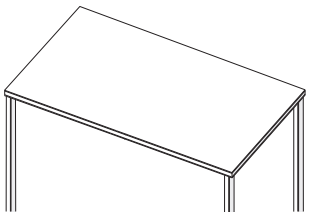

Instructions:

To install the hoop around your machine:

1. Confirm that your work surface (such as a table) is big enough. The table needs to be **at least as wide** as the mat **(51")** and **at least as long** as the mat **(27")** plus the length of the back of your machine (from the end of the throat to the end of **the "trunk" of your machine**.)

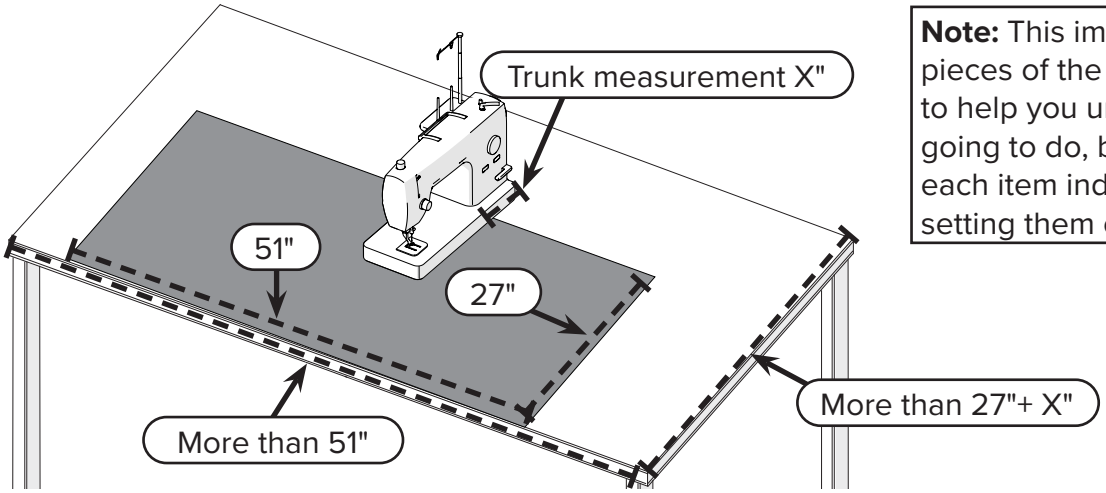

Note: This image shows you the pieces of the set up already in place to help you understand what you're going to do, but you can measure each item individually without setting them on each other first.

Other things to keep in mind as you plan how you'll set up your quilting equipment:

- You want the hoop's wheels to stay on the mat at all times, so the hoop will move easily.
- You want to be able to use the hand wheel or other buttons and features of your machine.
- You can set your machine on the short side of the mat, and use a work surface that is the same size as the mat.

The following are two examples of how you might set up your mat, machine, and hoop on your table. Other viable options exist.

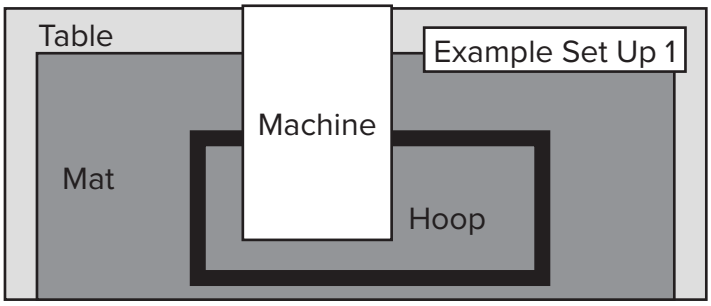

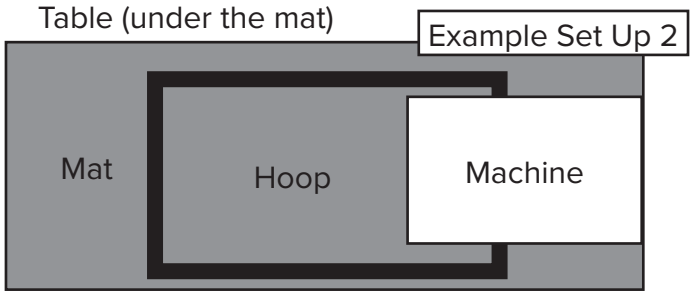

2. If your machine is already on the table, move it somewhere else.

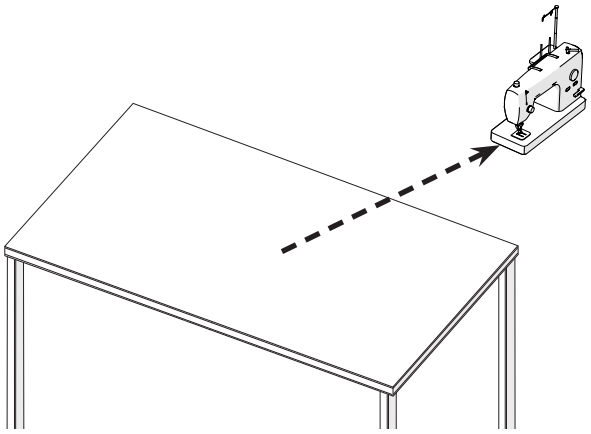

3. Unroll and smooth out the **mat** on your table.

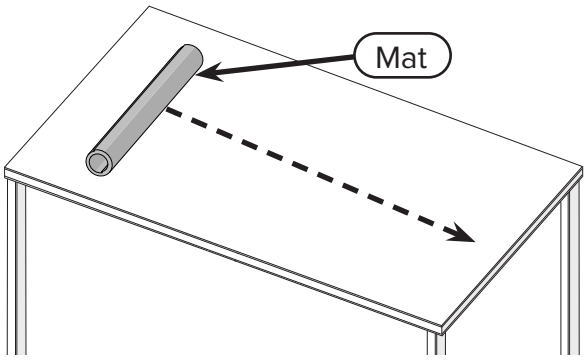

© Grace Company 2025

4 Place your machine on the mat, in the location you determined works for your setup. Note that in this example, the whole machine isn't on the mat, but the *entire machine bed* is on the mat and near the middle of the mat.

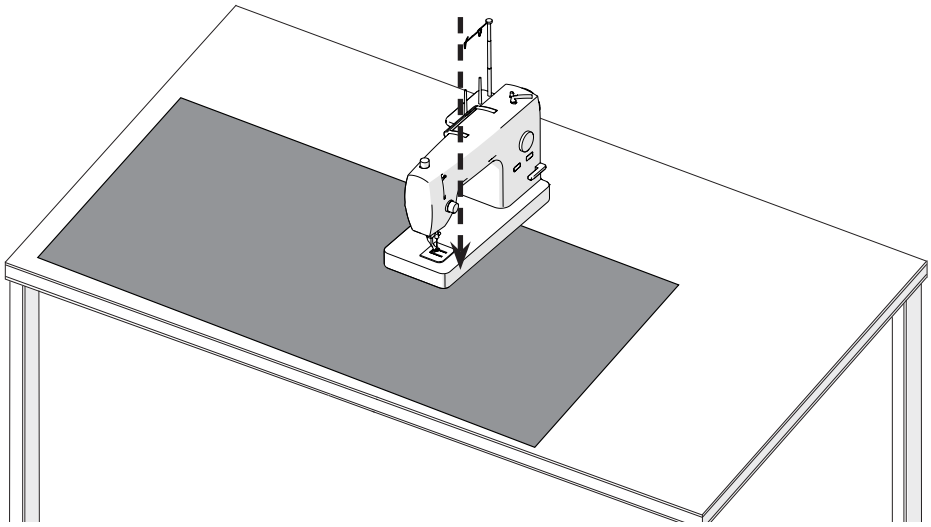

5 For both front corners of the hoop, pull the **tab** out and then twist the leg 90° so that the legs are in the same orientation as the legs on the back corners. Lock the legs in their new position by making sure the tab slides back to its original spot.

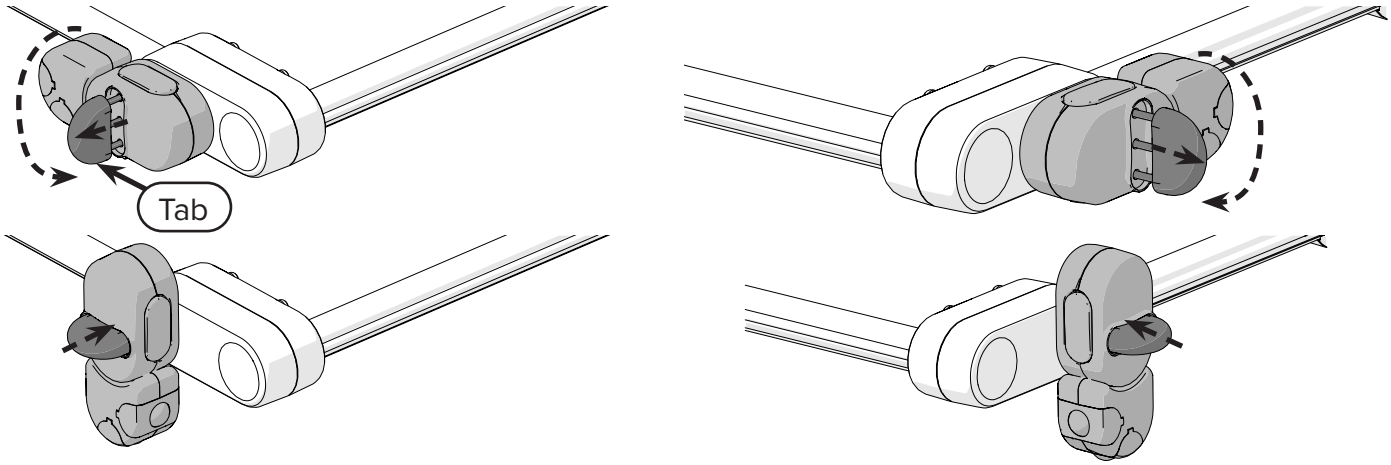

6 Slide the hoop around the machine until the back corners are roughly lined up with the end of the machine's bed.

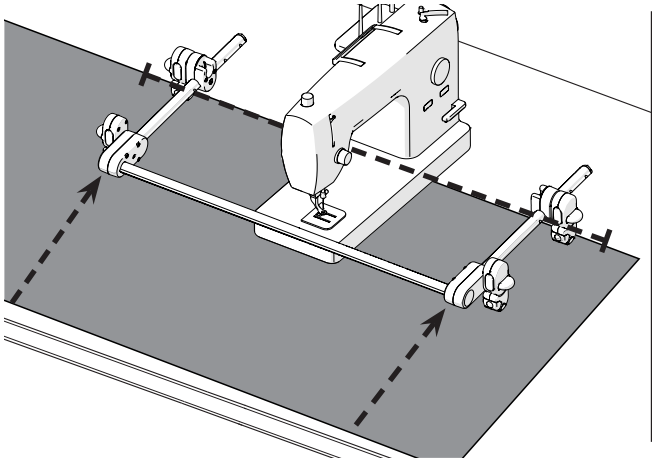

Note: If you want to set the machine on the side of the mat, you will still slide the hoop around the machine, but you will need to slide the hoop so that the side rail is through the throat of the machine, and the machine and the hoop are both on the mat.

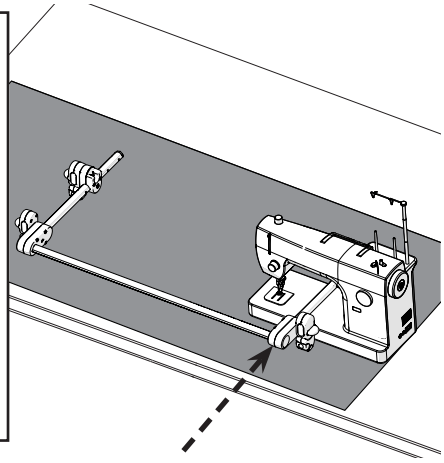

Task Result: The mat, your machine, and your hoop are placed together on your work surface.

Task 5 - Install the Take-Up Rail

Parts & Tools Needed:

Take-Up Rail

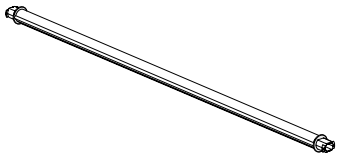

Instructions:

To install the take-up rail:

1. Hold the **take-up rail** with the **smooth side** toward the front rail. Then, slide the take-up rail through the throat of the machine.

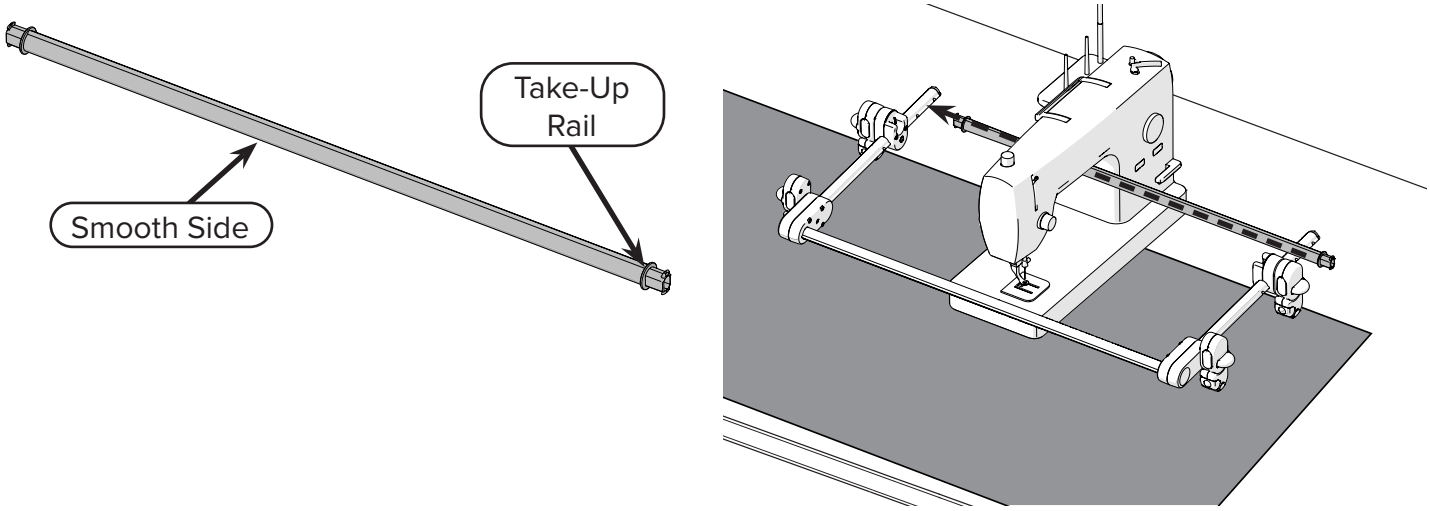

2. Slide the **tips** of the take-up rail into the **slots** in the back corners.

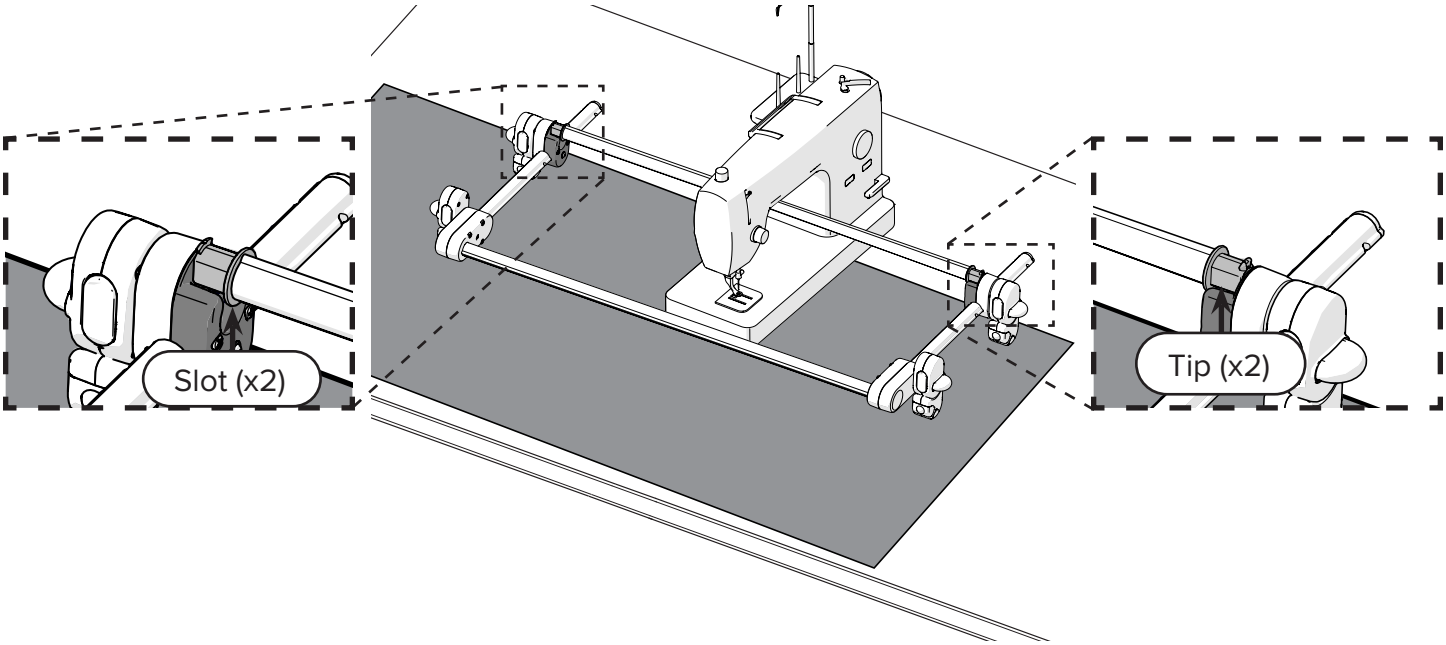

© Grace Company 2025

3 Twist the take-up rail until the smooth side is facing up and the tips are locked into place. You'll see a **lock icon** on both tips when the take-up rail is properly in place.

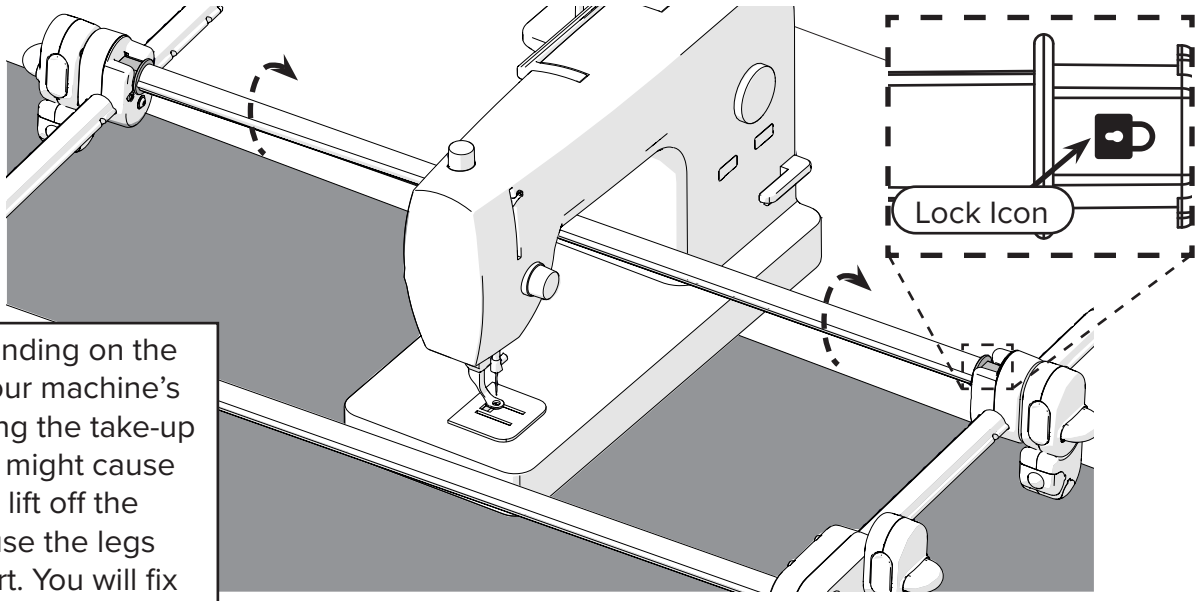

Note: Depending on the height of your machine's bed, securing the take-up rail in place might cause the hoop to lift off the table because the legs are too short. You will fix this in the next task.

Task 6 - Adjust the Take-Up Rail Height

Parts & Tools Needed:

Take-Up Rail Clamp

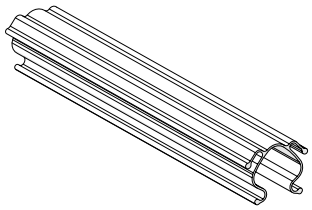

Elastic Clip

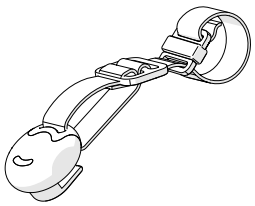

Instructions:

The take-up rail needs to be close to, but not touching, the bed of your machine. A **gap** that is no bigger than a **finger-width** is what you're aiming for.

Note: Because of its fabric sensor, the Little Rebel machine has a slightly different requirement for the gap. If you have a Little Rebel, you need to set up the take-up rail to be as close as possible (without touching) to the machine bed. See the Little Rebel manual for more information.

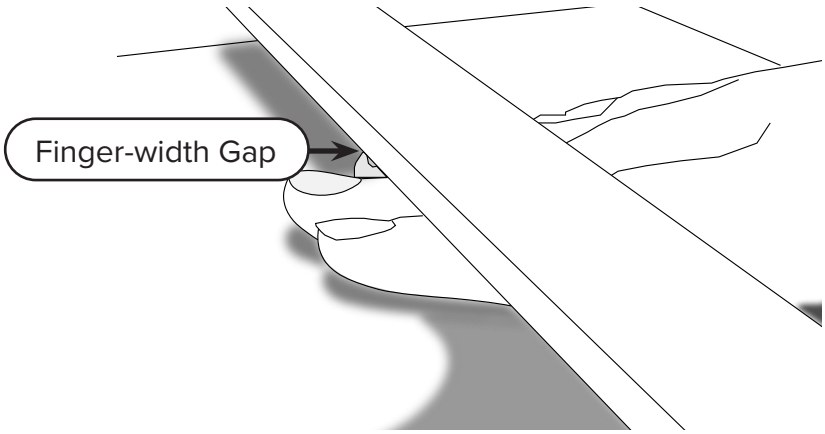

To adjust the take-up rail height:

1. Put a **take-up clamp** and an **elastic clip** on the take-up rail.

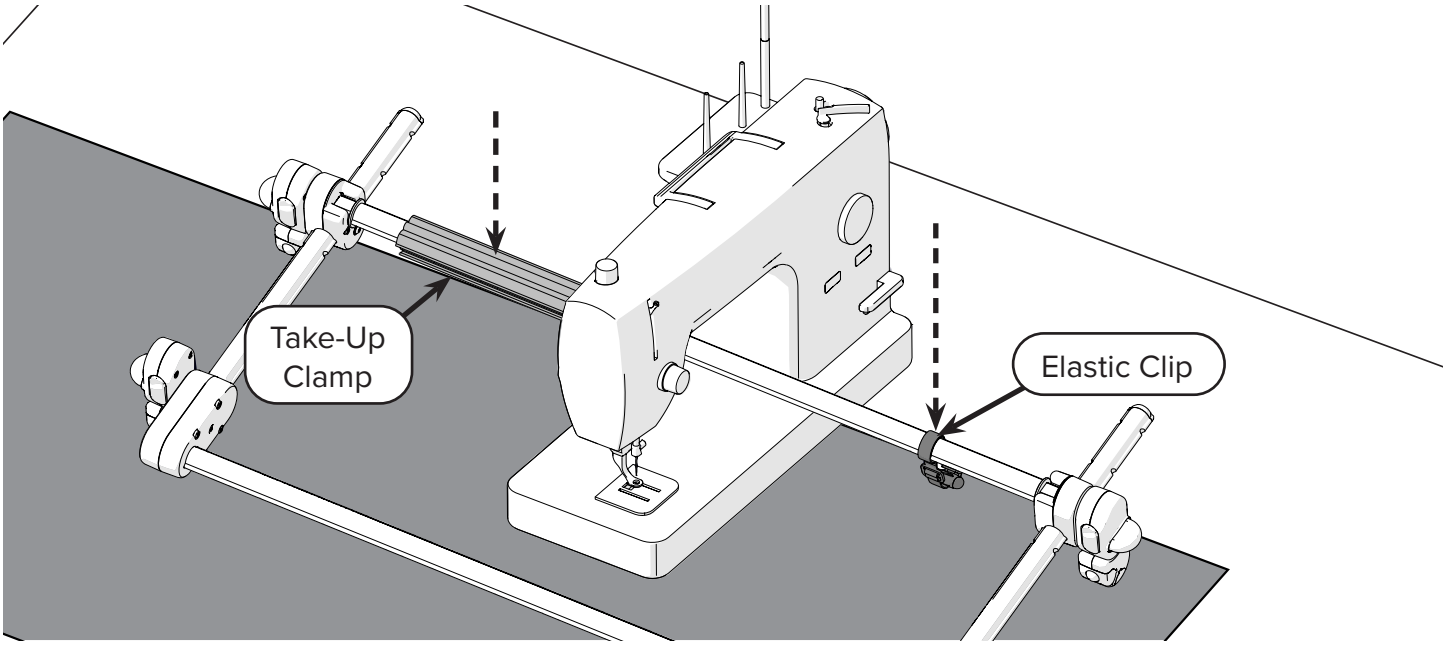

To attach the **elastic clip**, open the **clasp** on the clip by rotating one side of the clasp so the two halves are at a 90 degree angle to each other. Then pull the half with the pin out through the hole.

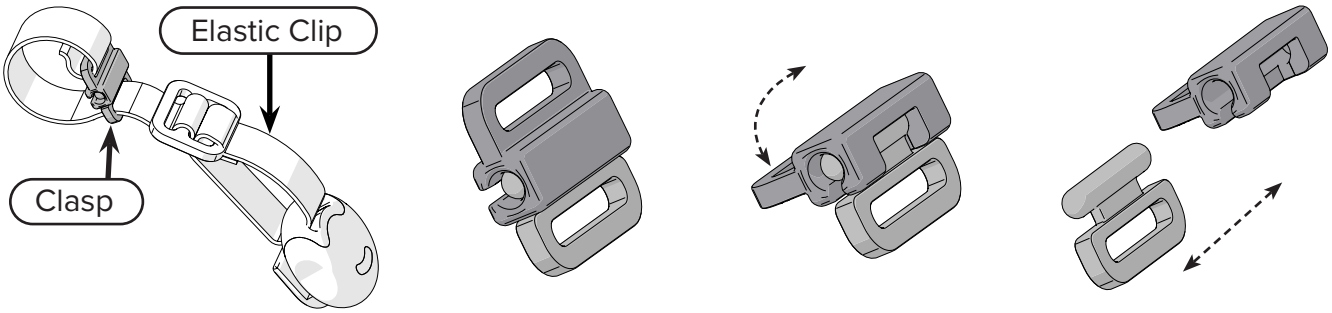

Attach the elastic clip to the take-up rail so the clip's **hook** is facing toward the front.

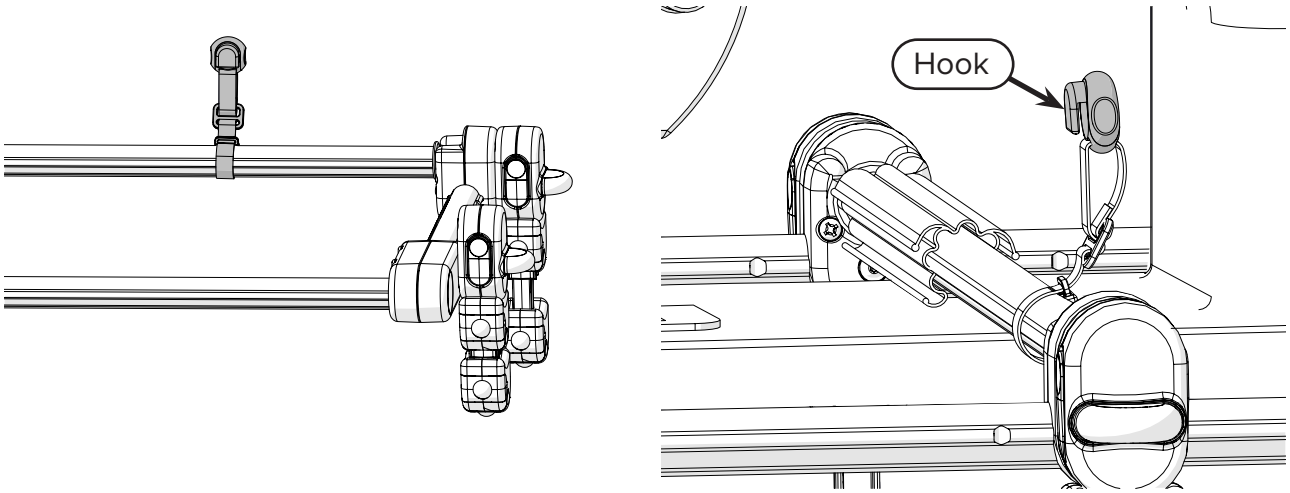

© Grace Company 2025

To close the clasp, insert the pin into the hole in the other half of the clasp. Then rotate the two halves until they are straight.

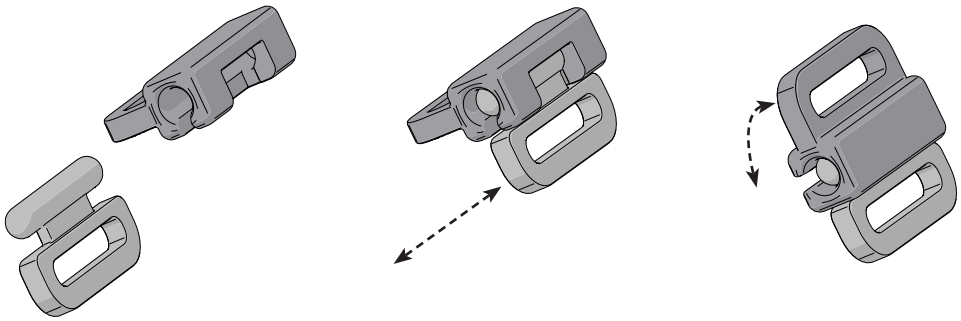

2 On the back-right corner, pull on the bottom of the **wheel case** to extend the **leg** until the take-up rail is roughly a finger-width above the machine bed. Use the **lines** to help you tell what **tooth** the leg is resting on.

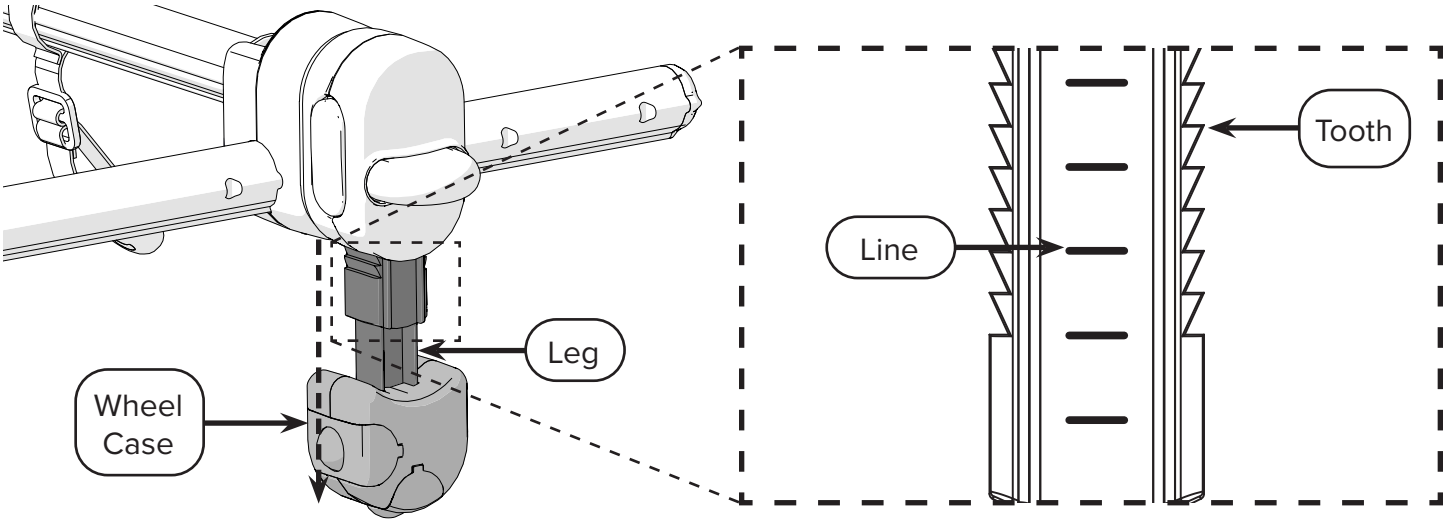

3 Set the leg on the back-left corner to the same height as the back-right corner.

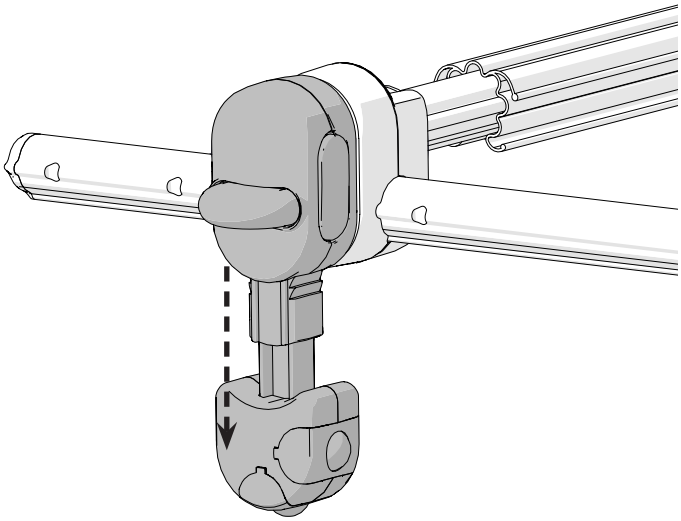

4 Move the hoop across the bed to test that the hoop can still slide over the machine with the clamp and the elastic clip on the rail. Remember, you want no more than a finger-width gap. It's ok if the elastic clip hits the machine.

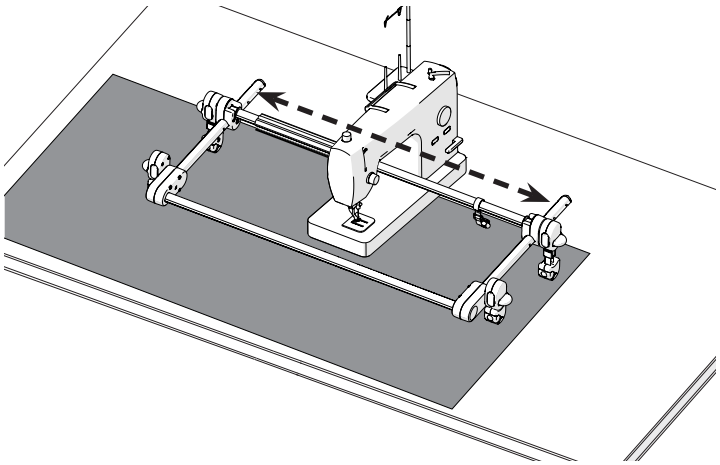

5. If needed, adjust the height of the back legs. Pull on the leg to extend it, or if you need to shorten it, hold in the **buttons** near the knob and then push the leg back into the corner. Then repeat step 4 to test again.

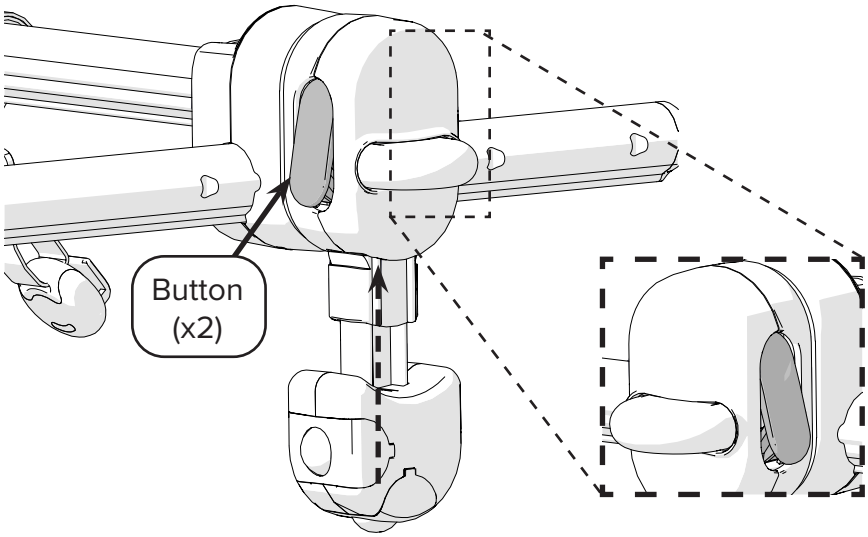

6. Once the take-up rail is the correct distance from your machine's bed, set the legs on the front corners to the same height as the legs on the back corners.

Note: If while you're quilting, you notice the hoop is dragging, it might be because the machine is barely touching the take-up rail or the clamp. If this happens, adjust the take-up rail to be slightly farther away from the machine's bed.

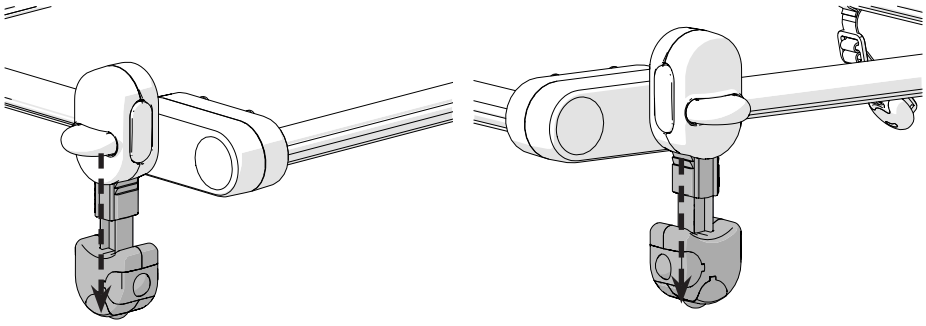

Task Result: The take-up rail is the correct height above the bed of your machine, and the hoop has all four legs firmly on the mat.

Task 7 - Prepare Your Machine for Quilting

Note: See your sewing machine manual for instructions on all of these steps.

To make sure that your sewing machine is set up for free-motion quilting:

1. If the option is available on your sewing machine, then switch to quilting mode.
2. Swap out your presser foot for a **free-motion or embroidery hopping foot**.

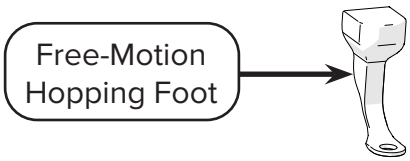

3. Lower your machine's feed dogs so they don't catch on the quilt backing, or install a feed-dog cover plate. **Note:** The switch to quilting mode might lower your feed dogs.
4. Perform all the normal tasks to set up your machine:
   - Plug in and thread the machine.
   - Wind and install a bobbin.

© Grace Company 2025

Task 8 - Prepare Your Quilt Sandwich

Parts & Tools Needed: Fabric & Batting (not included); Pins (not included); Fabric Marking Pencil or Chalk (not included); Measuring Tape or Ruler (not included)

When you quilt on the Hummingbird hoop, you must make your quilt top, batting, and backing into a *quilt sandwich* before you place it on the hoop.

As you make your quilt sandwich, you must prepare the backing and batting to be larger than the quilt top. Because the needle on your machine cannot reach the corners of the hoop, you need to increase the size of your backing and batting. The bigger size of the backing and batting makes sure the clamps can still hold the quilt sandwich to the hoop while the quilt top is closer to the center where the needle can actually reach to stitch.

Note: The first time you prepare a quilt sandwich, use spare fabric and batting to practice. Like any skill, quilting on a hoop takes practice to master!

To prepare your quilt sandwich:

1. Measure the length and width of your **quilt top**. Write down the measurements.

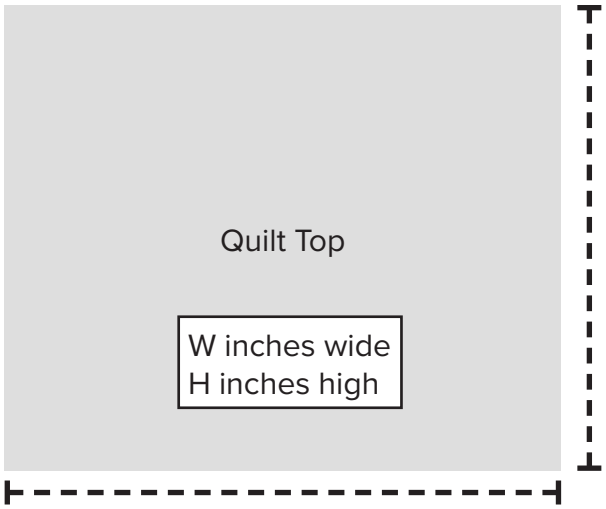

2. Cut **backing** and **batting** that is at least **16 inches wider and longer** than your quilt top. (It's 8 inches bigger all the way around.)

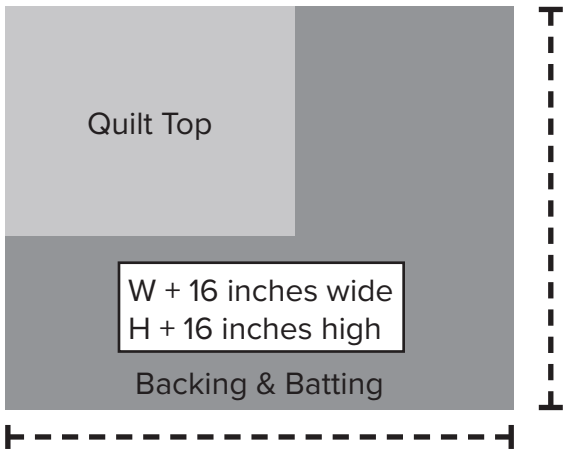

3. Fold your quilt top in half with the **right side** facing out. **Mark** the center of the top edge with a pin or marker on the right side.

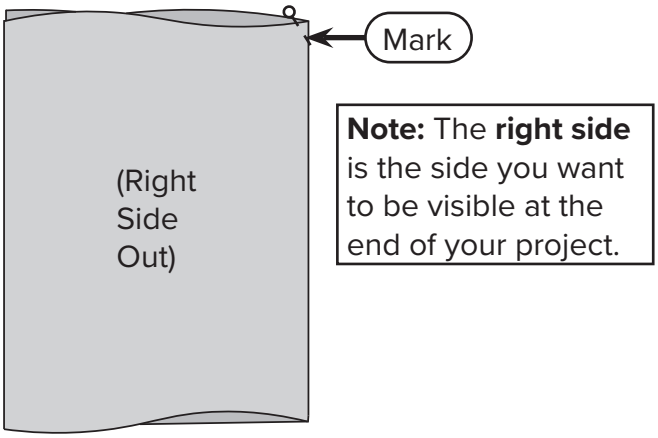

4. Fold the batting in half with the **scrim side** facing in. **Mark** the center of the top edge. Then use a ruler to make a **second mark 8 inches** below the first.

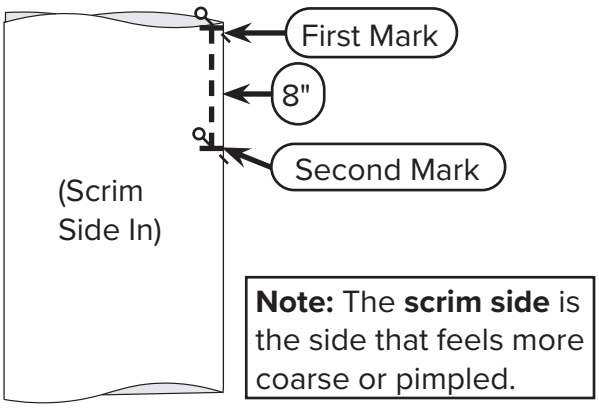

5 Align the mark on the quilt top with the second mark on the batting. **Pin** the two layers together, so the right side of the quilt top is facing up, and the scrim side of the batting is facing down.

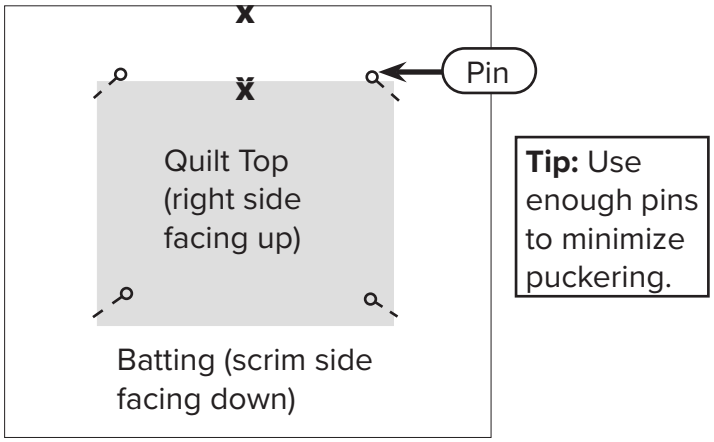

6 Lay your **backing** down, **wrong side** facing up. Make sure to smooth out any wrinkles in the fabric.

Note: The **wrong side** is the side you want to be hidden at the end of your project.

Backing (wrong side facing up)

7 Lay the batting and quilt top over the backing and **pin** the layers together.

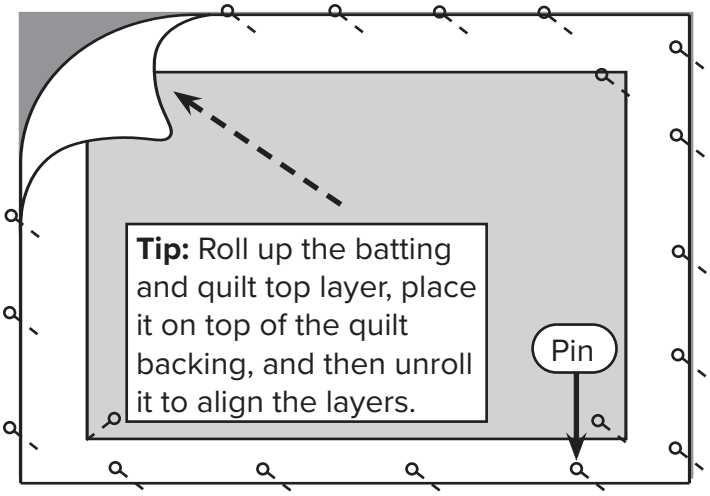

8 Roll the quilt up from the **bottom edge** so you can easily carry it to your hoop.

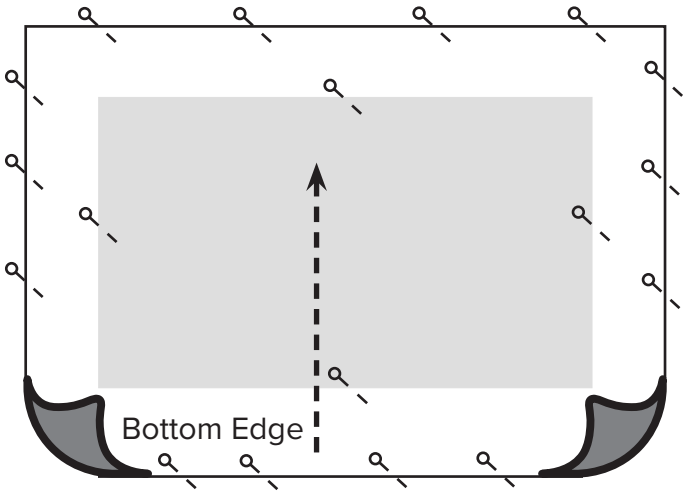

Task 9 - Attach Your Quilt

Take the following steps to attach your quilt sandwich to the hoop:

1 Carry the rolled-up quilt to your hoop. **Note:** As you place the fabric, keep the fabric wrinkle-free.

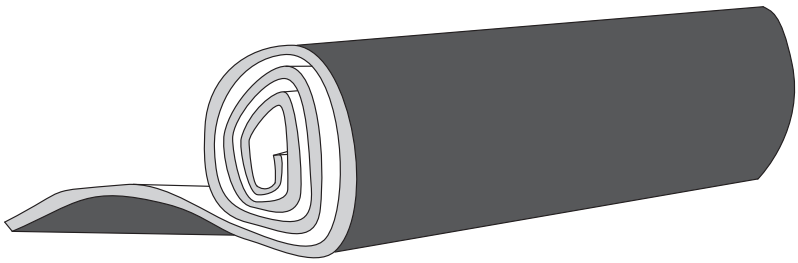

© Grace Company 2025

2 If needed, remove all the fabric clamps from the rails.

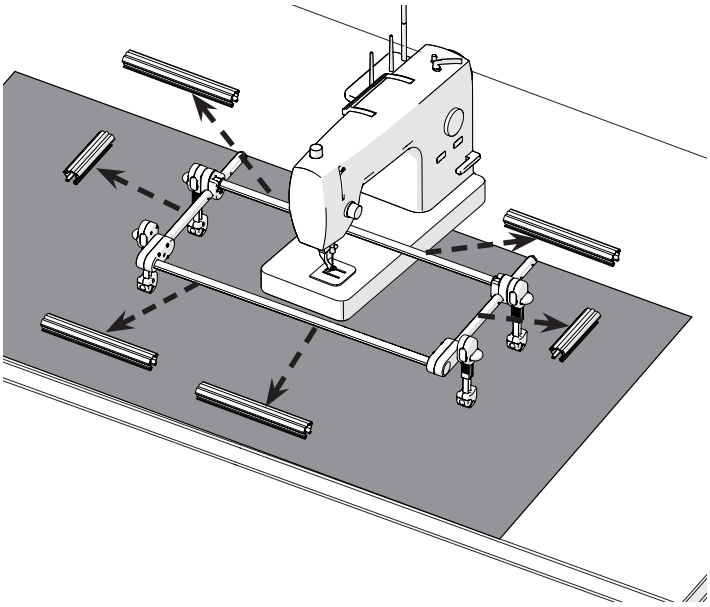

3 Secure two **elastic clips** around the take-up rail, two around the front rail, and one on each side rail.

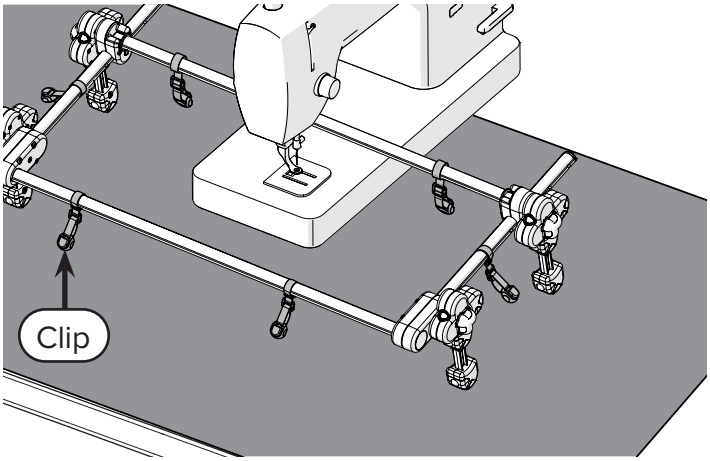

4 Raise the needle on your machine. Slide the top edge of the quilt under the hopping foot. Drape the quilt over the hoop, doing your best to keep the quilt square with the hoop.

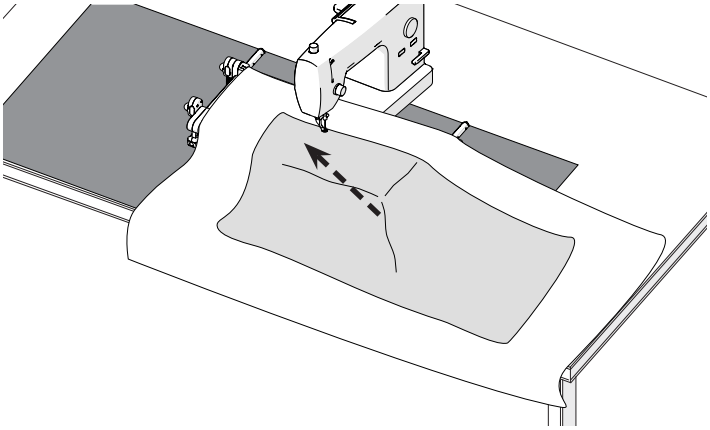

5 Your quilt top cannot be in the actual corner of the hoop because your machine's needle can't reach the edges of the hoop. Do the following to place your quilt top where it can easily be reached by your machine's needle:

a On the **placement template**, find the long horizontal **line at 1 ½ inches**. Draw a line across the template there.

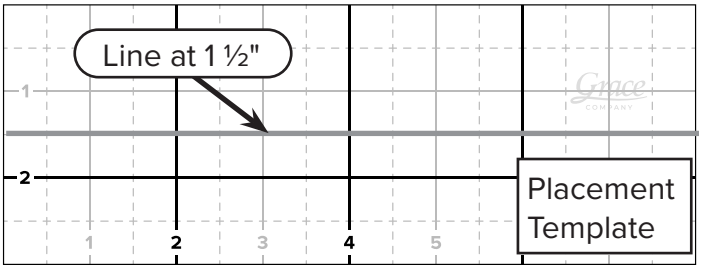

b In the top-left corner of the hoop, orient the template so that the short side is touching the left side rail and the long side is touching the take-up rail. **Tip:** Put one clamp on the take-up rail to keep the fabric from falling off if you're struggling to keep the quilt on.

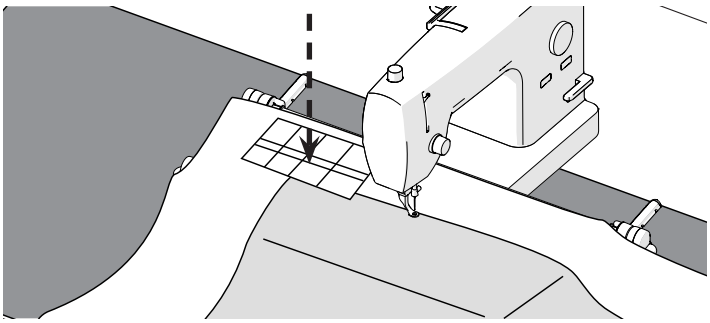

c Adjust the quilt sandwich to place the top-left corner of the quilt top such that it aligns with the **1 ½ inch** line and the **6 inch vertical line** on the template.

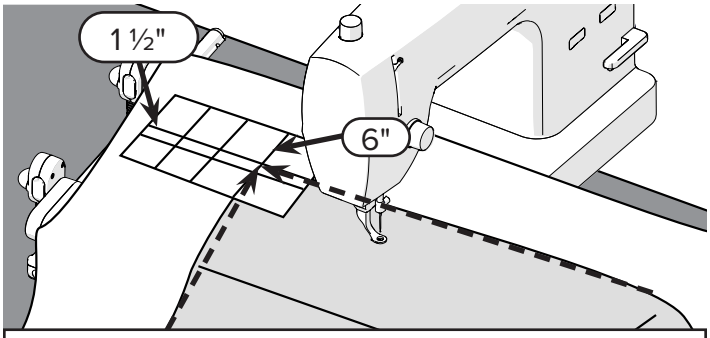

Note: You might find the template easier to use if you cut the template at the indicated lines.

d Slide the template along the top and left edges (one at a time). Adjust your quilt sandwich to make sure the quilt top is straight and square all the way across and down the hoop.

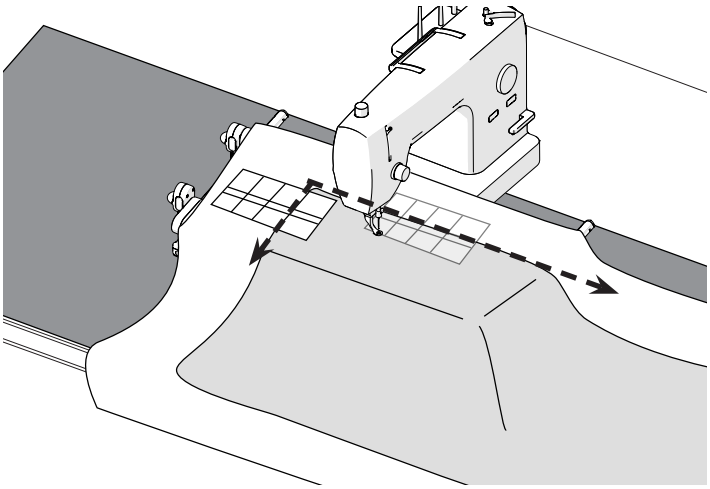

6 Once the quilt top is in the correct place, use the clamps to hold the fabric. Note that the side clamps are shorter, while the front/take-up clamps are longer and have the Hummingbird logo.

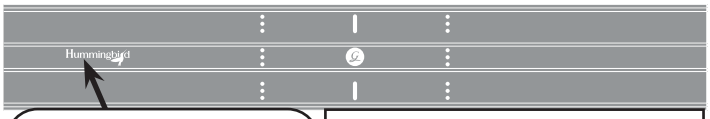

Hummingbird Logo

Take-Up/Front Clamp (x4)

Tip: When you put the clamps on the front and side rails, put them on from the top, and then twist them a quarter turn (90°) to the side of the rail. Putting them on this way adds tension to the fabric while holding it on the hoop.

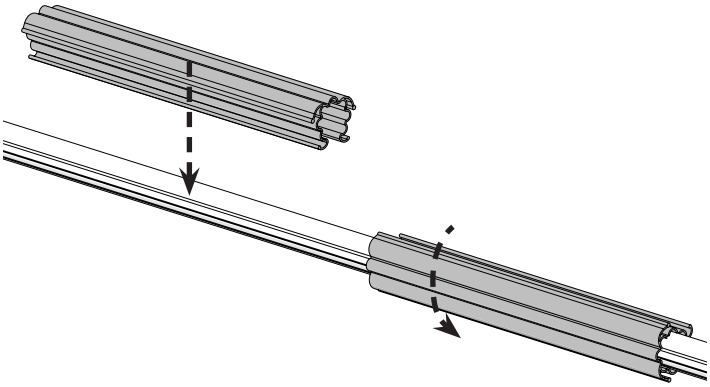

Do the following to place the clamps:

a On the left, press a long clamp onto the take-up rail so that the edge of the clamp is against the corner.

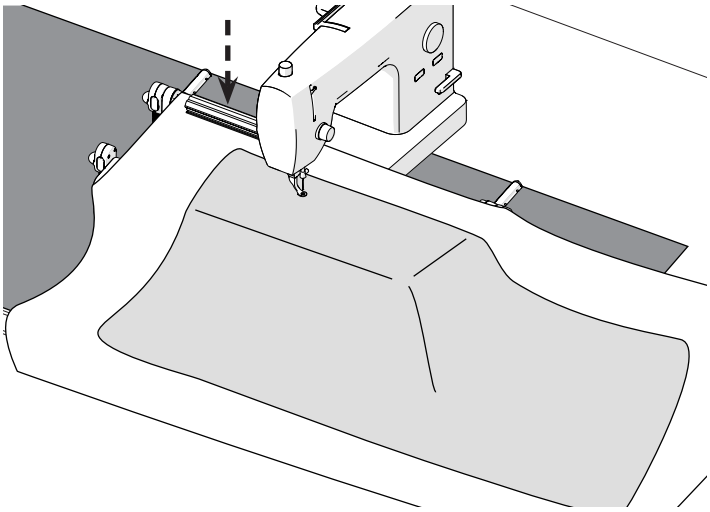

b On the left side of the front rail, place a long clamp so that the edge of the clamp is against the corner.

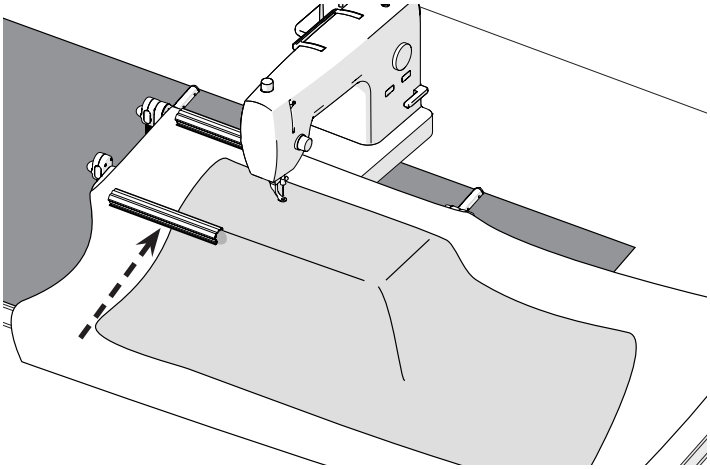

c Repeat steps 6a–b on the right side of the hoop.

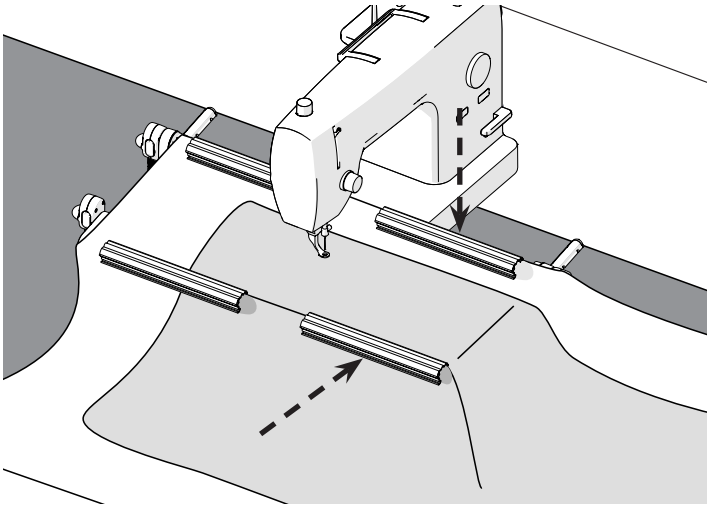

© Grace Company 2025

d On each side of the hoop, place a short clamp so that the edge closest to the take-up rail is touching the corner.

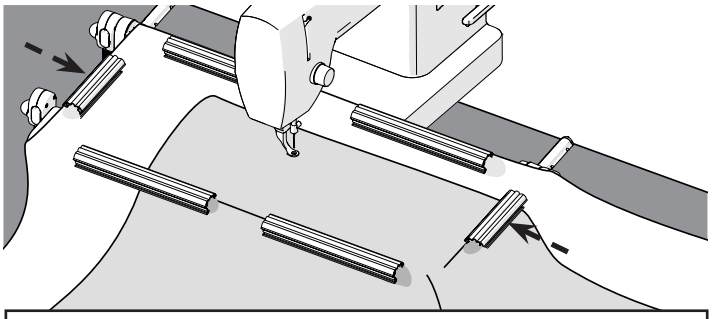

Note: While you're working at the edges of the quilt, you might not be able to clamp the fabric down on that side. Just place the clamp on the rail anyway to keep track of it.

Task 10 - Test Your Fabric Tension

Parts & Tools Needed: Penny (not included)

To test your fabric tension:

1 Drop a penny from about **6 inches** above the surface of the fabric.

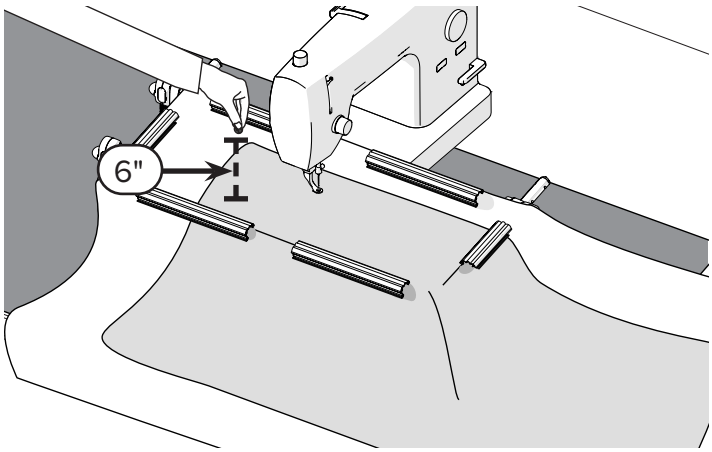

2 Do one of the following:

a If the penny only partially bounces and doesn't fully lift from the fabric, your tension is good. Continue to the next task.

b If the penny doesn't bounce at all, or seems to roll to a low spot in the fabric, then the tension is too loose. Remove the fabric clamps from the front rail, and pull your quilt toward the front rail a little. Replace the fabric clamps, and then test your tension again.

c If, on the very rare occasion, the penny bounces and completely clears the fabric, then the tension is too tight. Remove the fabric clamps from the front rail and shift your quilt sandwich toward the take-up rail, or away from the side rails a little. Replace the fabric clamps, and then test your tension again.

Task 11 - Mark Your Quiltable Area

Because of the length of your machine's throat and the shape of the hoop, you can't quilt on every inch within the hoop's rails. The space you can quilt on is the *quiltable area*. You need to learn the quiltable area of your hoop to keep your hoop, machine, and most importantly, your quilt top safe. If you try to move your hoop in a way that puts your needle outside of the quiltable area, your hoop and machine might collide, which can disrupt the plan for your designs.

To mark your quiltable area:

1. Look at the clamps. On the **side clamps**, the **line** closest to the back of the hoop (near the take-up rail) indicates the **back edge** of the **quiltable area**. On the longer **front/take-up rail clamps**, the dotted **line** closest to the middle of the hoop indicates the **side edge** of your quiltable area. **Note:** The horizontal edge of the quiltable area near the front rail depends on the length of your machine, so none of the clamps can help with indicating that edge. This task will help you understand how to indicate that edge for yourself.

   While you're learning the quiltable area, use **tape** to mark the edges. After you're comfortable with the space, you can use the markings on the clamps to keep track of the quiltable area. **Tip:** While marking the edges, put the tape on the outside edge of the lines.

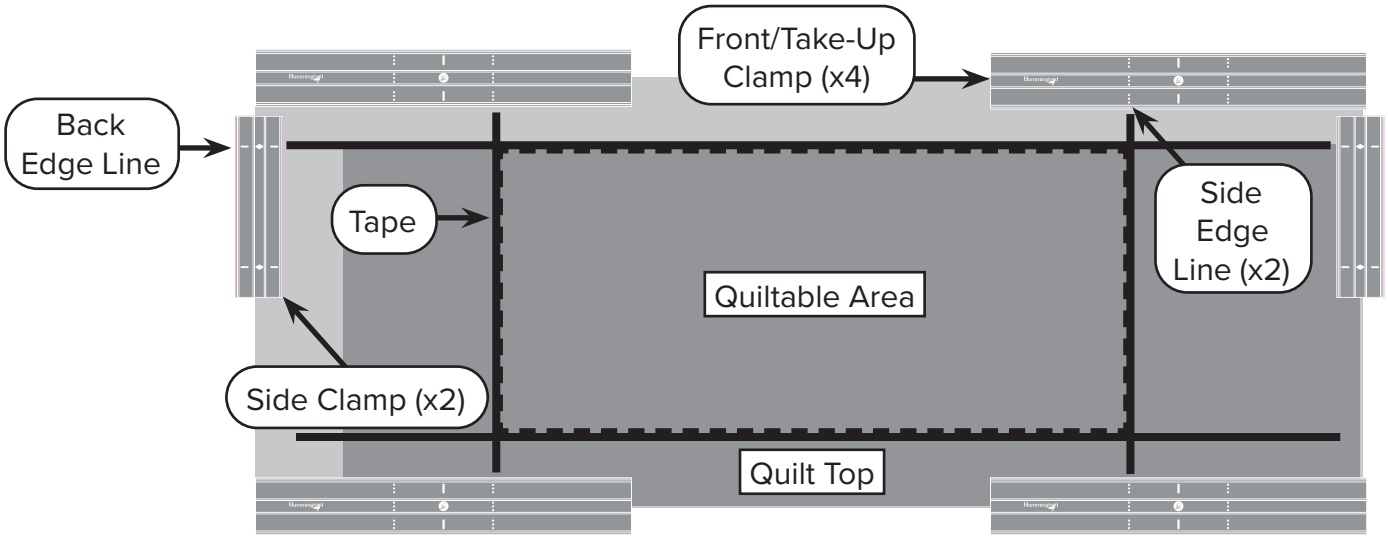

2. Move your hoop so that the front rail is close to the machine's needle. Stop when either the back of the **throat** is about 1 inch from the take-up rail OR your **needle** is about 1 ½ inches away from the front rail.

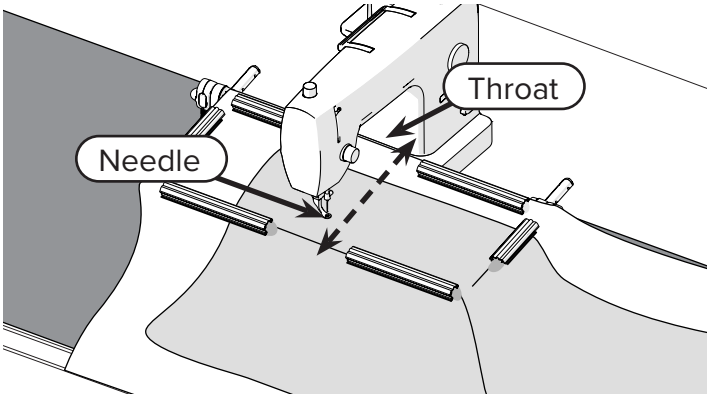

3. Under your needle, use a piece of **tape** to mark a line all the way across the hoop. This is the front edge of your quiltable area. **Tip:** Slide the placement template along the line to confirm that it's straight.

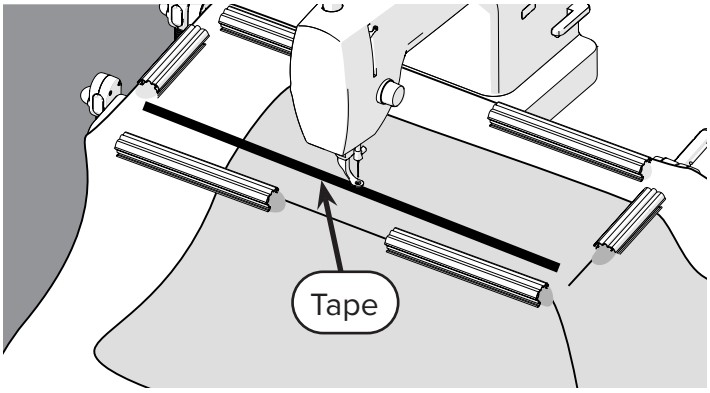

© Grace Company 2025

4 Near the back of the hoop, use a piece of **tape** to mark all the way across from the marks on the side clamps that are closest to the take-up rail. This is the back edge of your quiltable area. **Note:** The tape should be roughly an inch and a half from the take-up rail. If it's not, check that the clamps are right up against the back corners.

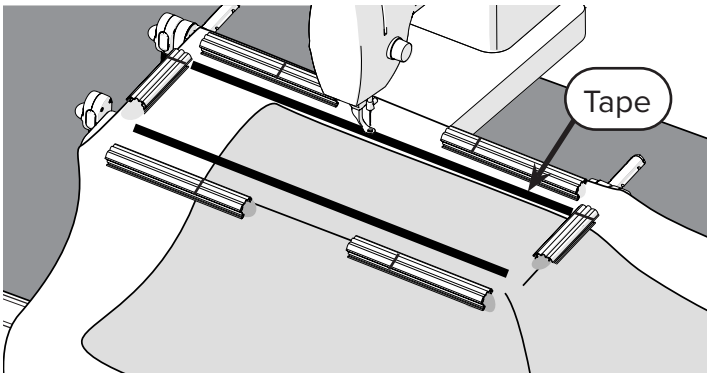

5 Use a piece of **tape** to mark a line between the innermost dotted lines on the left clamps on the take-up and front rails.

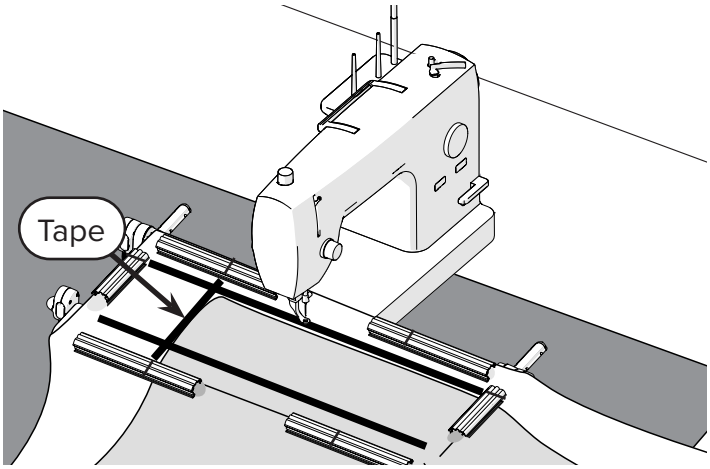

6 Use a piece of **tape** to mark a line between the innermost dotted lines on the right clamps on the take-up and front rails.

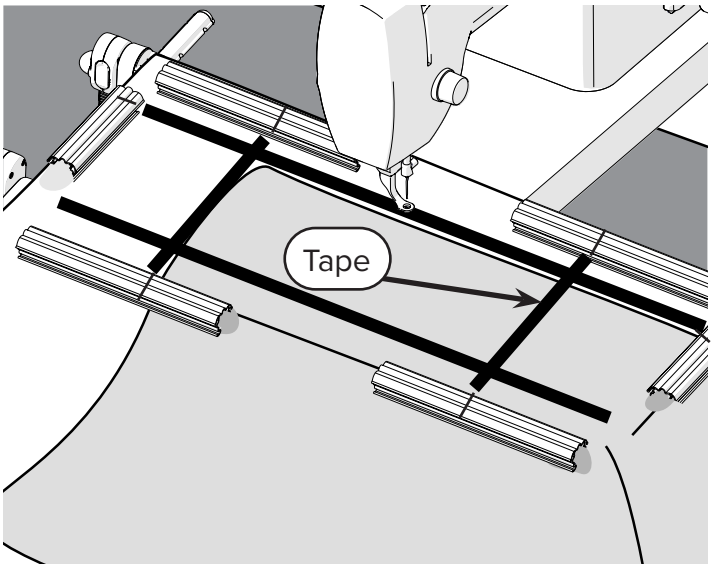

Task Result: These four lines mark the edges of your quiltable area. While quilting, *don't* move the hoop in such a way that the needle goes outside of these lines. Remember, staying in the quiltable area makes sure you don't hit the hoop on any part of your machine and disrupt the plan for your designs.

> **Note:** As you gain confidence with your hoop, you might decide that you don't need lines of tape and can just use the marks on the clamps to visualize the quiltable area. But if you have *any* doubts, take the time to fully visualize where you can safely quilt with tape.

Task 12 - Hold Excess Fabric Out of the Way

After you finish setting up your quilt, most likely, fabric will be draping over the hoop's edges (potentially getting in the way of you moving the hoop around). The elastic clips hold the fabric up and out of the way.

Tip: As you re-hoop your quilt to stitch on different parts of it, different amounts of fabric will drape over different rails, so feel free to change which rails you place the clips on when you move the fabric.

To use the elastic clips:

1 Roll up any fabric that is draping over the rail (most likely the front rail or the take-up rail).

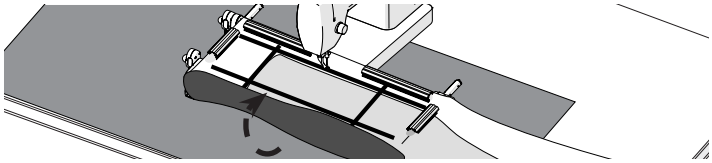

2 Loop the **elastic clip**'s band around the **fabric roll** and over the clamp. Slide the **hook** of the clip into the **ridge on the clamp**.

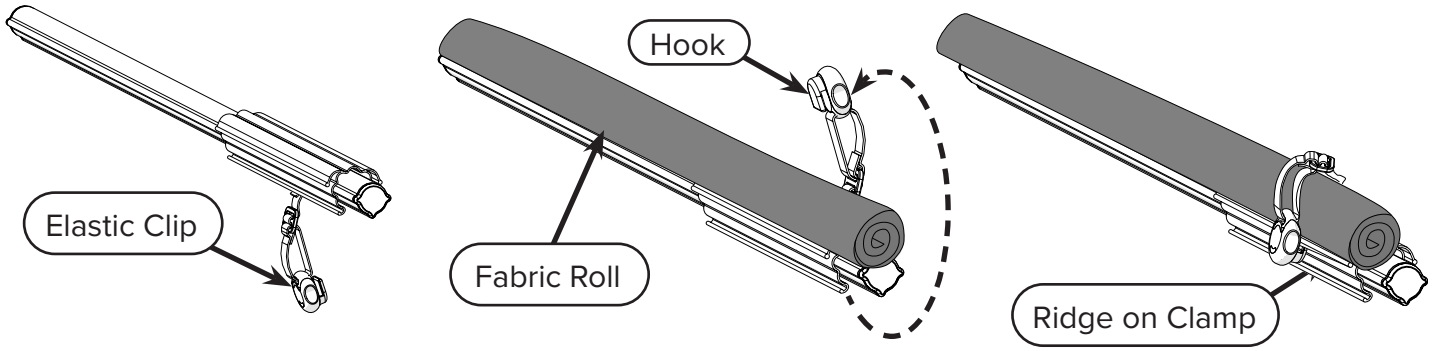

Task 13 - Learn to Start & End Your Stitching

Parts & Tools Needed: Scissors (not included)

If the bobbin thread tail is under your quilt sandwich as you stitch (whether as you tack down your edges or as you stitch your designs), it can get tangled or sewn into the quilt. To prevent this, start and end your stitching by making sure the bobbin tail is on top of the quilt sandwich.

You need to tack down the edges of your quilt top to prevent the fabric from getting folded over or excessively wrinkled. Every time you re-hoop your fabric, tack down the revealed edges.

Tip: Remember to take the time to practice starting, ending, and stitching your designs on scrap fabric before quilting on your projects.

To start and end your stitching:

1 Before you start stitching, pull up your bobbin thread to prevent the thread tail from dangling underneath the fabric and getting sewn in place as you quilt.

Take the following steps to pull up your bobbing at the start of stitching:

a Move the hoop until the needle is where you want to begin stitching. For tacking down your edges, place the needle about ¼ inch from the edge of the quilt top, as far to the front and left as you can (the exact position varies depending on what part of your quilt top you're working on). For starting a design, place the needle where it makes sense to start the design—maybe at the top-left corner of the zone.

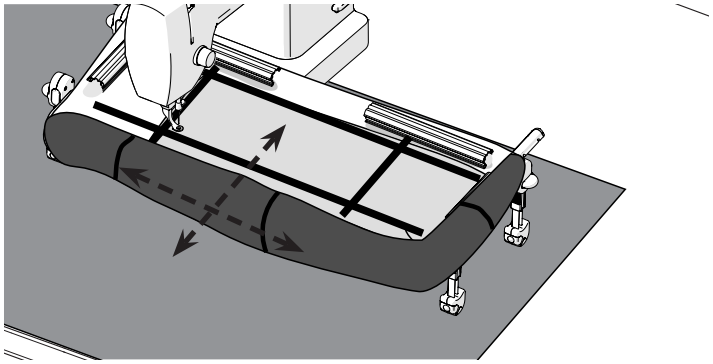

© Grace Company 2025

b Pick up and hold the **top thread tail** so that it is taut. **Note:** It doesn't matter whether the thread is under the hopping foot or not.

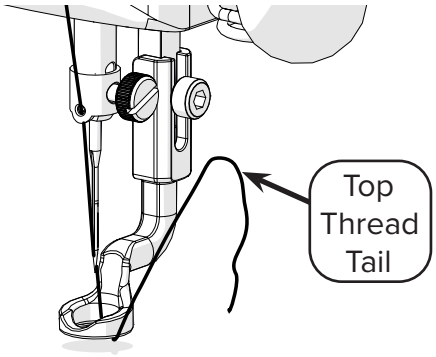

c While still holding the top thread tail, make a **single stitch**.

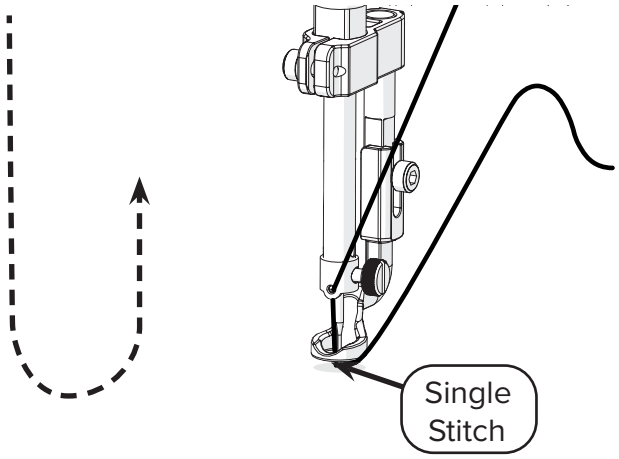

d Continue holding the top thread tail, and move the hoop several inches to the side. The top thread pulls a loop of **bobbin thread** through the **start point** in the top of the fabric.

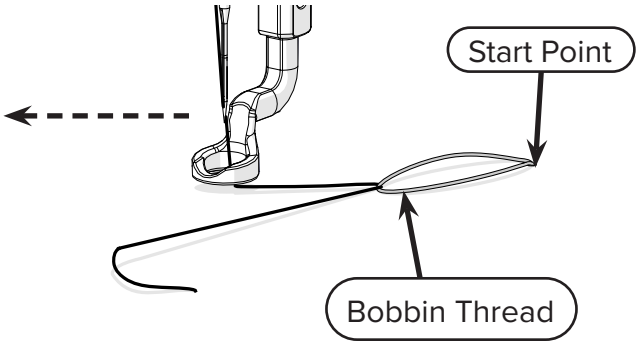

e Continue pulling until the loose end of the **bobbin tail** comes up from underneath the fabric.

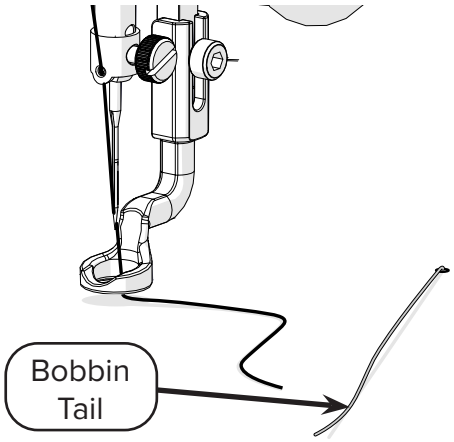

f Gather up both **thread tails** and move the hoop back to the **start point**. Pull on the thread tails, especially the bobbin tail, until both threads are tight.

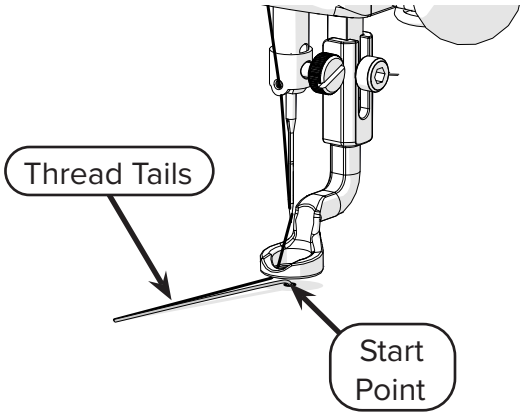

2 **Secure** your design by making three **stitches** very close together right next to the place where you pulled up the bobbin thread. **Note:** You don't have to do the securing stitches when you are tacking down your edges.

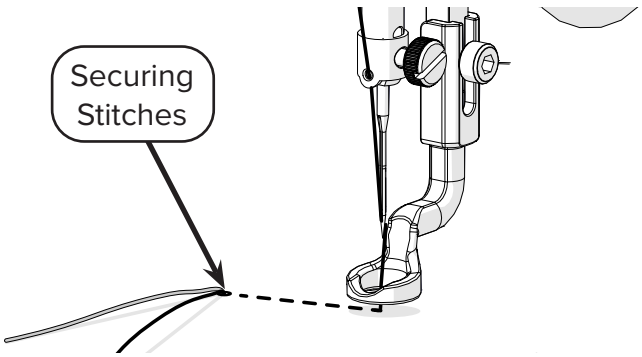

3 If you're tacking down your edges, stitch along the edges of the quilt top, about ¼ inch from the backing and batting. **Tip:** Remember, you need to tack down any revealed edges every time you re-hoop.

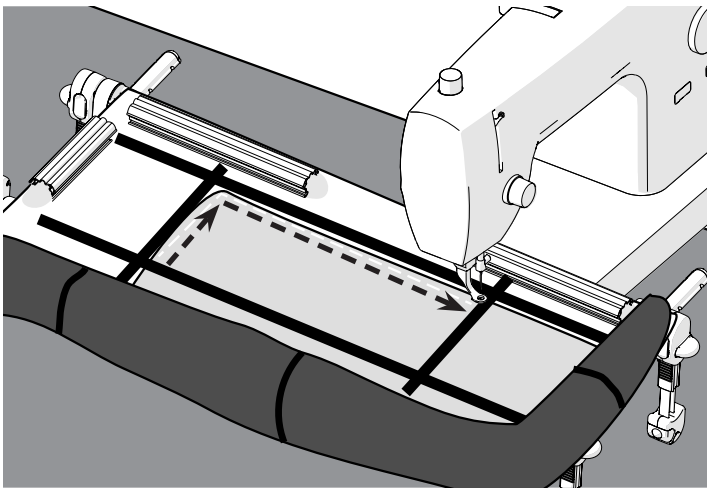

4 If you're stitching your **designs,** try to smoothly move the hoop as you work. Remember, quilting with a hoop is a skill, and a new skill takes time and practice to master. Be persistent!

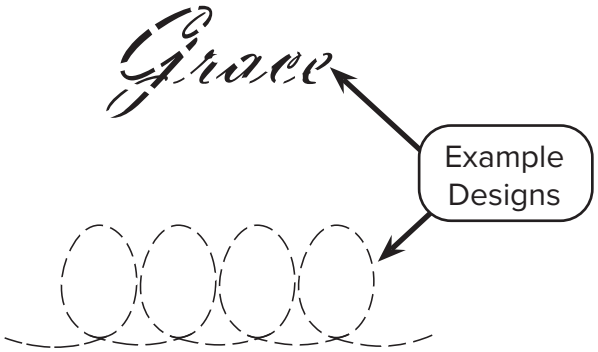

5 Once you are finished stitching your design, complete your design by making another **securing stitch**. **Note:** You don't have to do the securing stitch when you are tacking down your edges.

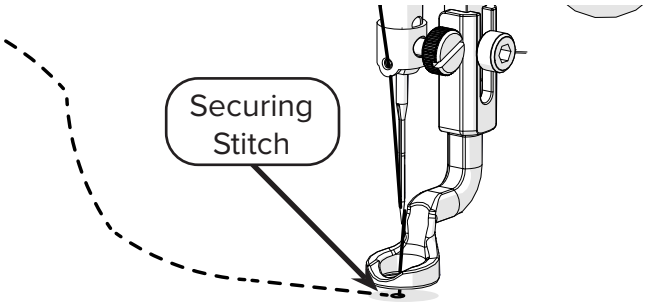

6 Pull up your bobbin thread to prevent the thread tails from dangling underneath the fabric and getting sewn in place as you quilt. Pull up your bobbin thread every time you finish stitching, whether you are tacking down your edges or finishing your designs.

Note: The process of pulling up the bobbin thread at the end of stitching is slightly different from the process at the start of stitching.

Take the following steps to pull up your bobbin thread at the end of stitching:

a Move the hoop so that the needle is a few inches away from the **last stitch**.

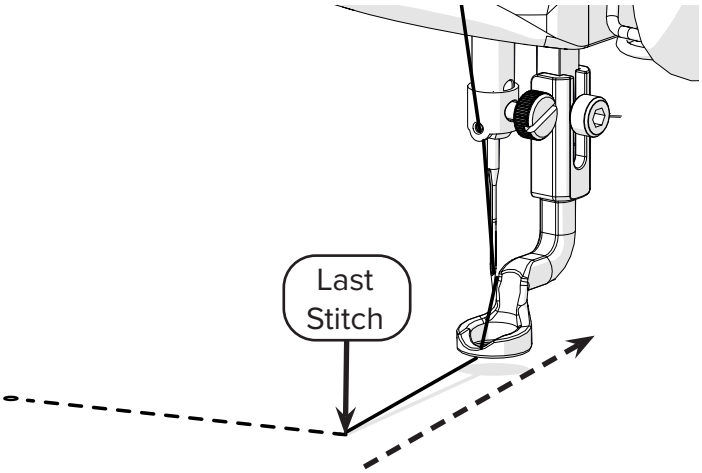

b Hold the **top thread** to make a loop, and then move the hoop so that the needle returns to the last stitch.

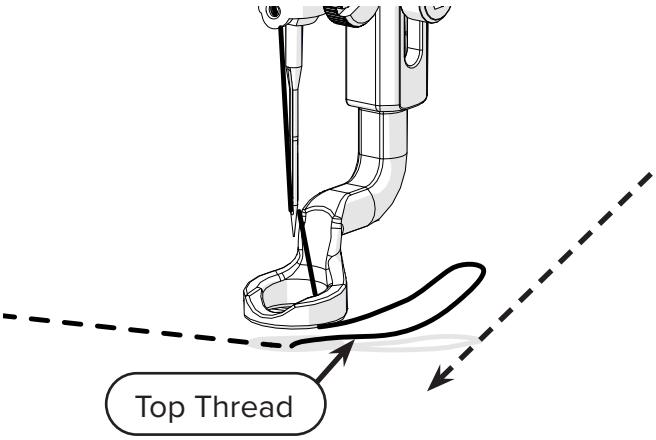

© Grace Company 2025

c While still holding the loop, make a **single stitch** over the last stitch.

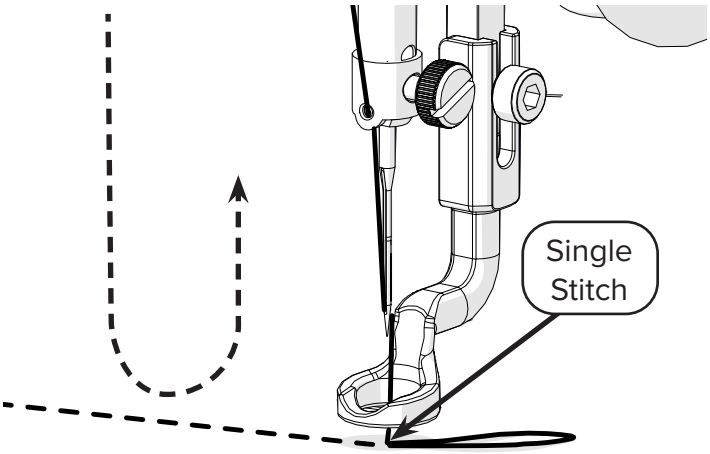

d Continue to hold the loop and move the hoop so the needle is away from the last stitch again.

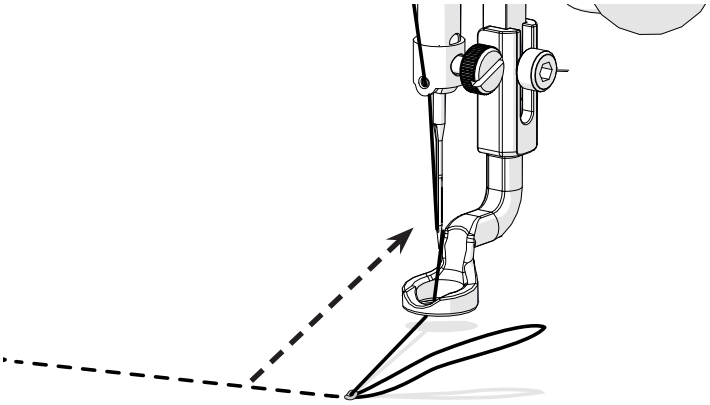

e As you move away from the last stitch, a loop of **bobbin thread** is pulled up. Keep moving away until the loop is big enough to grab.

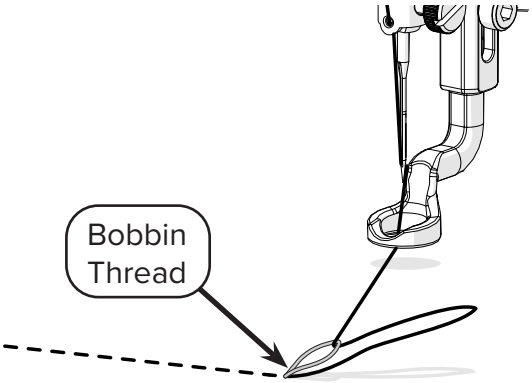

f Cut all the threads close to the securing stitches at the end of the design. Also cut the thread tails from the beginning of your design.

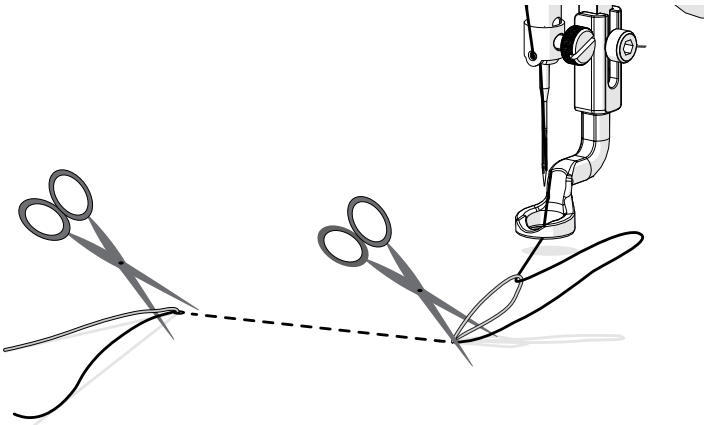

Task 14 - Set Up the Next Zone

Many quilts are larger than your hoop's quiltable area. Therefore, you must create zones on the quilt that you fully quilt before you move the quilt to a different section. The following image is an example of how the zones on your quilt could end up.

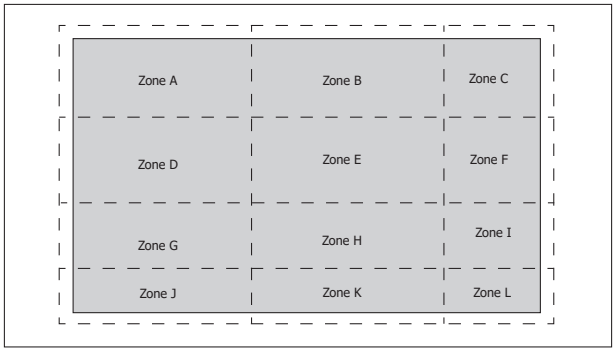

Your quilt might have more or fewer zones depending on the size and shape of the quilt. Your zones do not need to be the same size. Notice that in the example image, the last column and last row of zones are smaller than the others. In general, the best method for stitching out your zones is to start at the top-left corner of your quilt, stitch each zone across, and then move down to the next row of zones.

To set up the next zone:

1. After pulling up your bobbin thread and cutting your thread tails, lower the needle back into the fabric at the point you plan to begin stitching again. For example, the last stitch in the top row of your stitching, or the last stitch you just made. This action helps to mark where you're going to restart your stitching after you get your next zone in place on the hoop.

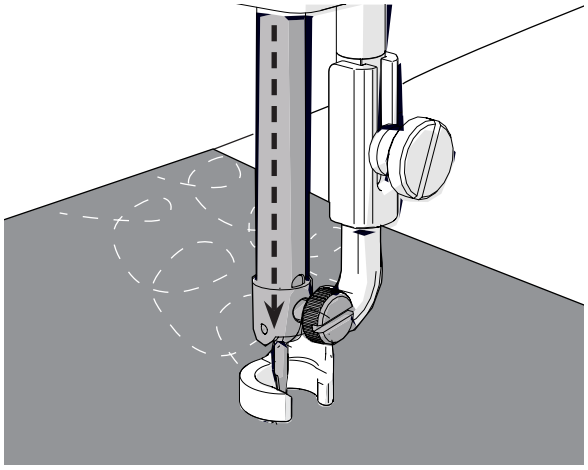

2. If you used the elastic clips to hold a roll of fabric on the rails, then unhook the clips and allow the fabric to hang freely.

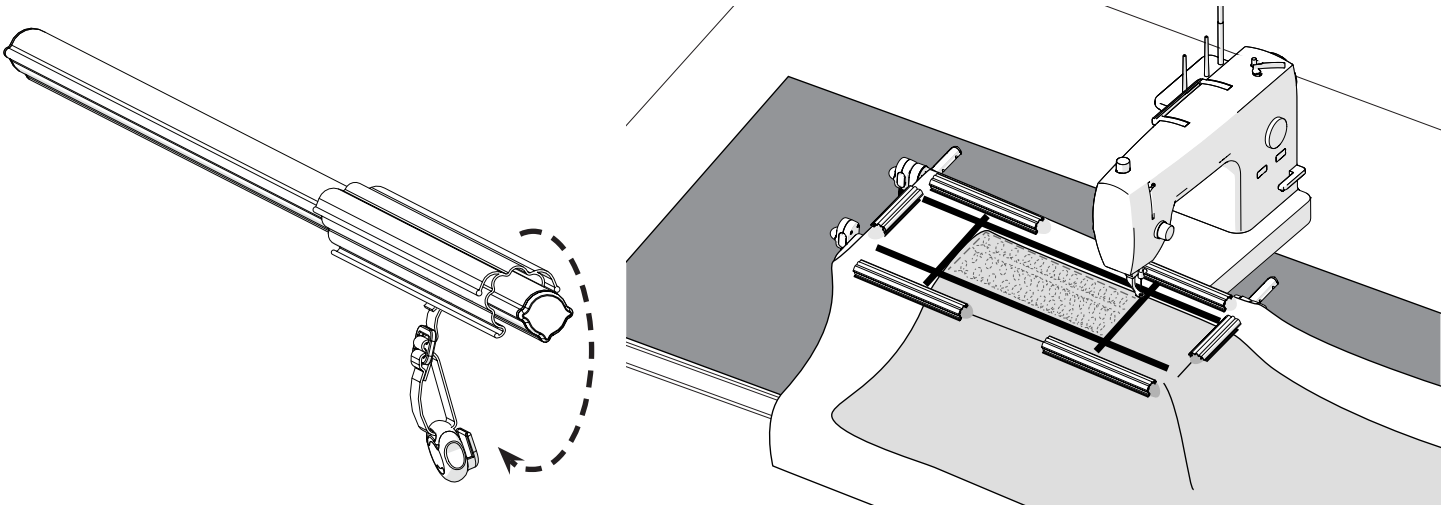

3. Take the clamps off the rails.
Tip: If you're moving zones horizontally across the hoop, leave one clamp on the front rail on the side that is opposite the direction you are moving your fabric. (For example, if you're moving the quilt to the left, keep the clamp on the right on the front rail.) The clamp will help you keep the fabric straight and square with the hoop.

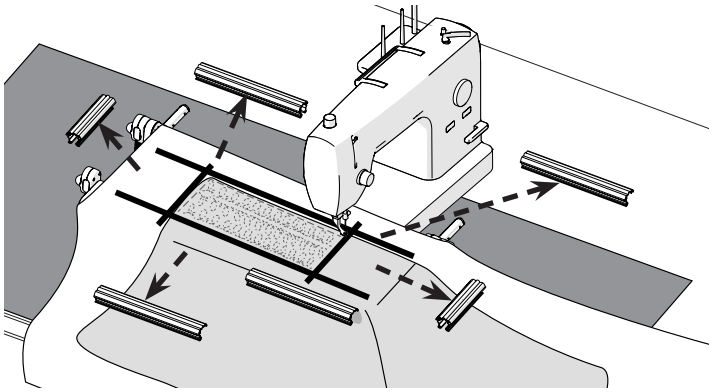

© Grace Company 2025

4 With one hand, grab a hoop rail. With the other, gently hold the fabric on the opposite end of the hoop from the rail you're holding. Then slide your hoop (not the machine or the fabric!) so that the next zone of unstitched space is in the quiltable area. To make sure your stitch lines match up and to avoid gaps in your designs, make sure 2 inches of the stitched area from the previous zone are in the quiltable area of the next zone. Use the tape and the location of your needle to estimate where the quiltable area starts. Once you're confident in the overlap, take the tape marking your old quiltable area off.

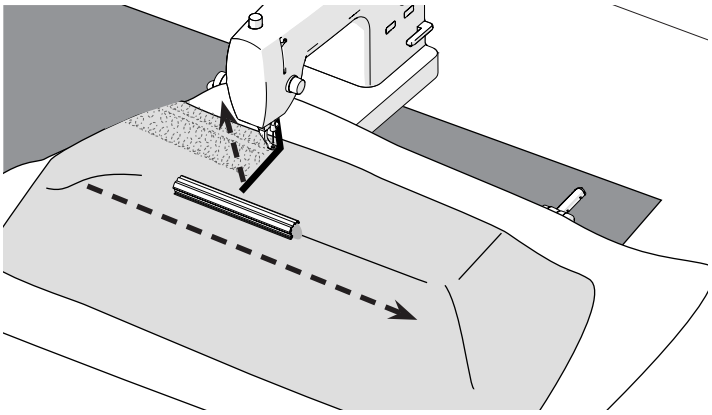

Tip: If you kept a clamp on the hoop, hold the clamp with one hand, and pull on the hoop with the other hand to move the hoop to its new position.

5 Replace the fabric clamps to secure the quilt in the new position. Remember to place the clamps touching the corners so that they help you visualize your quiltable area (see page 20).

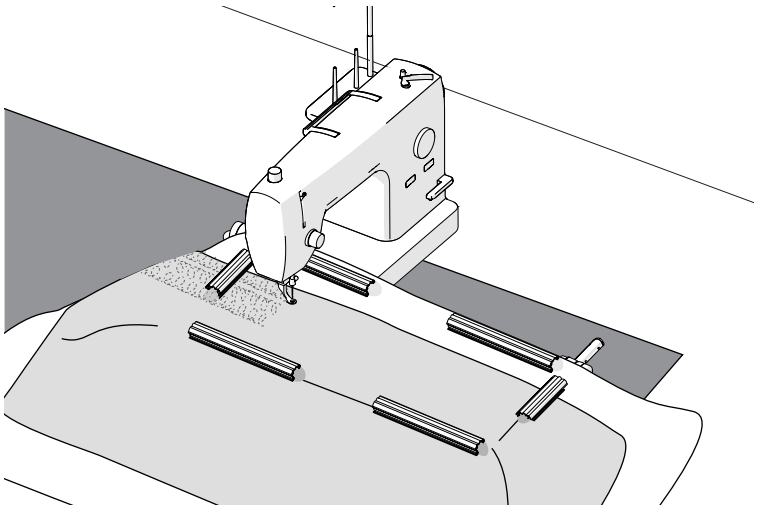

6 Roll up any draping fabric. Tack down any revealed edges. Also, mark your quiltable area with tape. You are now ready to quilt out your next zone.

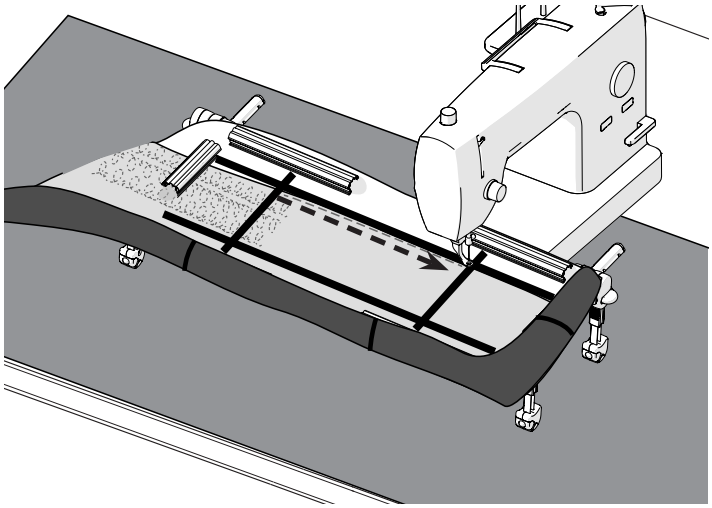

Task 15 - Store the Hoop

To store the hoop:

1. If you have a project on the hoop, remove it. Leaving a quilt sandwich taut on the hoop while in storage can stretch out the fabric.

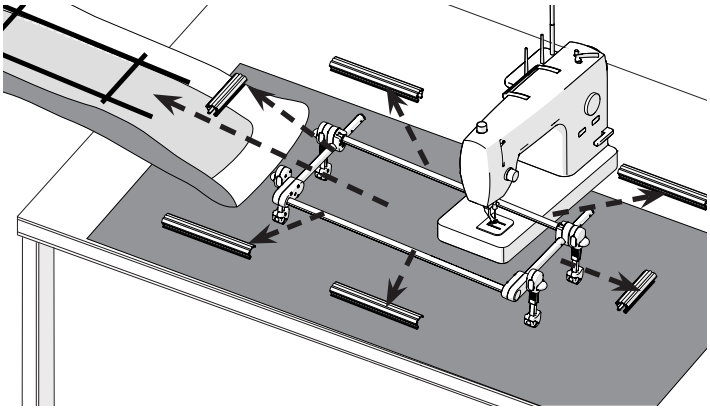

2. Remove the take-up rail from the hoop. Twist the take-up rail until the smooth side is facing toward the front rail and the tips are unlocked, and then slide it up and out.

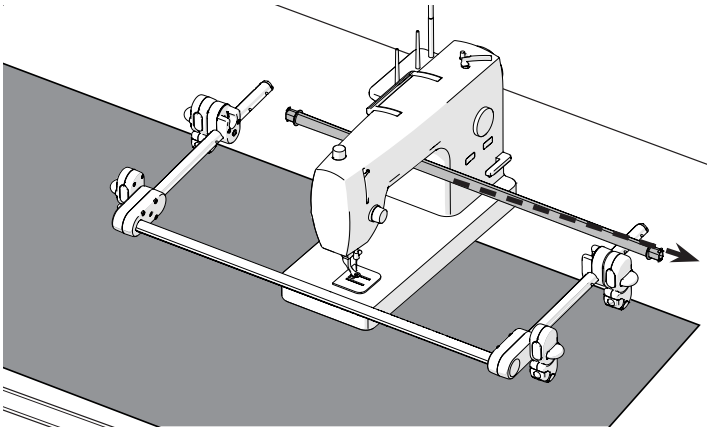

3. Pull the hoop away from your machine.

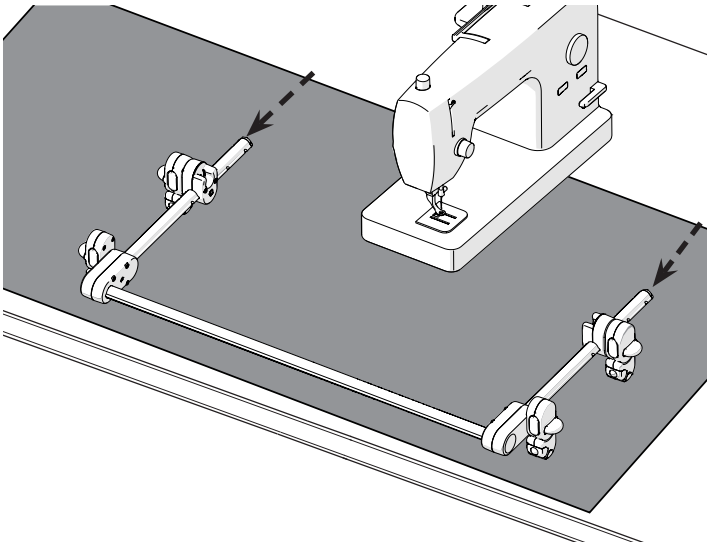

4. Place the clamps back on the hoop, as well as the elastic clips.

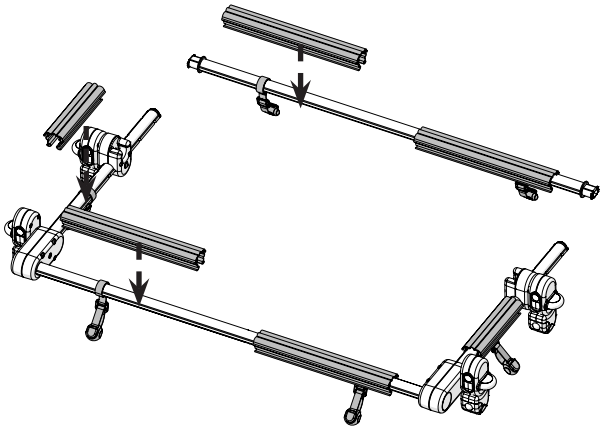

5. Rotate the legs so that they are parallel with the rails. Pull the tab out and then twist the leg 90°. Lock the legs in their new position by making sure the tab slides back to its original spot.

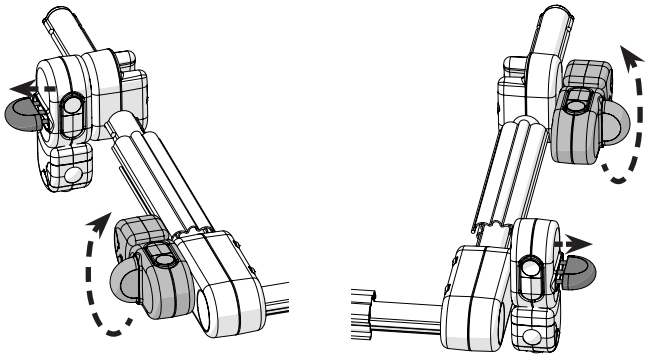

6. If you want to store the hoop as a full rectangle, reinsert the take-up rail, and then store the hoop where you like. Otherwise, continue to the next step.

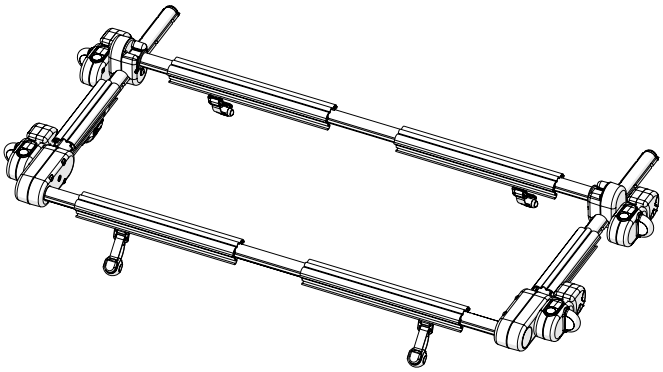

© Grace Company 2025

7 For each side, use the 2.5 mm Allen wrench to remove the two **M4 x 35 mm SBHCS** that hold the front rail to the front corners.

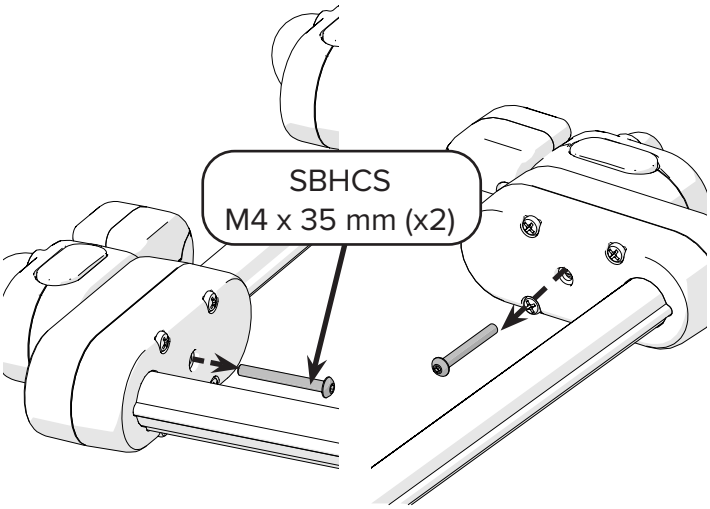

8 For each side, slide the side rail out of the corner at least until it's out of the front rail.

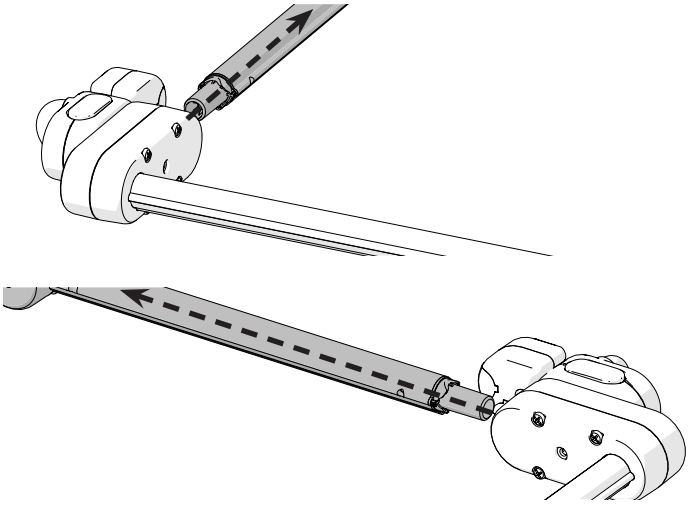

9 Slide the front rail out of the corners.

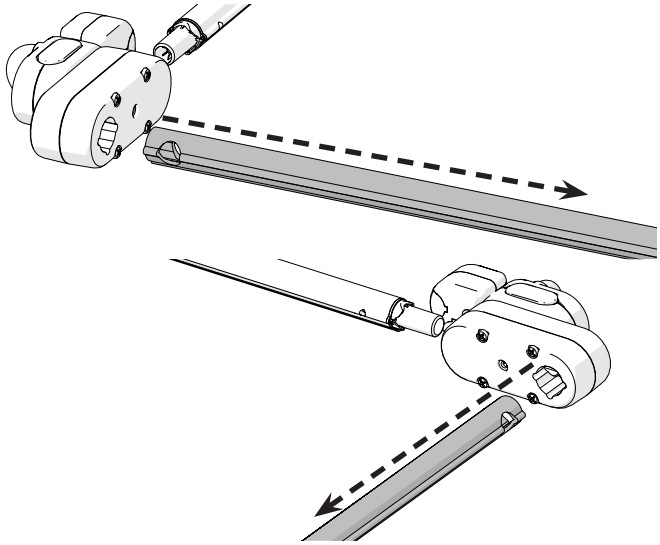

10 For each side, slide the front corner back into place on the side rail, and then re-tighten the screw.

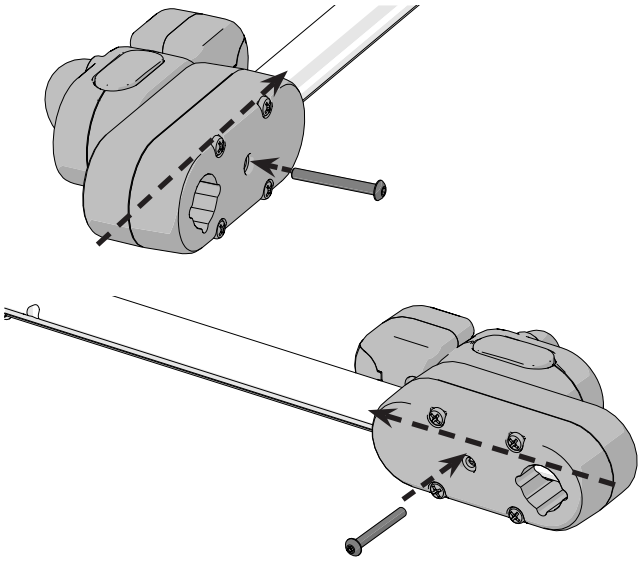

11 Store the four rails of the hoop together where you like. **Tip:** You could roll the rails up in the mat to keep them contained.

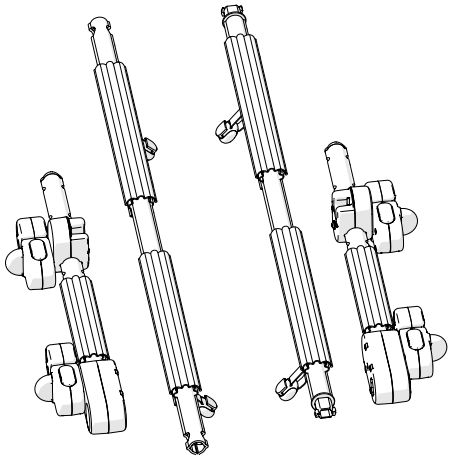

Additional Resources

The next pages are resources to help your quilting endeavors. Copy and reuse them as you like.

Also, you can access printable copies of these resources as well as more digital resources for your hoop by scanning the QR code below.

SCAN ME

Design Tracing Paper

This sheet shows several basic designs you might want to stitch into your quilts. The arrows on the lines on the left side are hints of how to draw the designs in one continuous line. Copy these lines onto paper to practice or right onto your quilt if you want. Copy the paper to practice again.

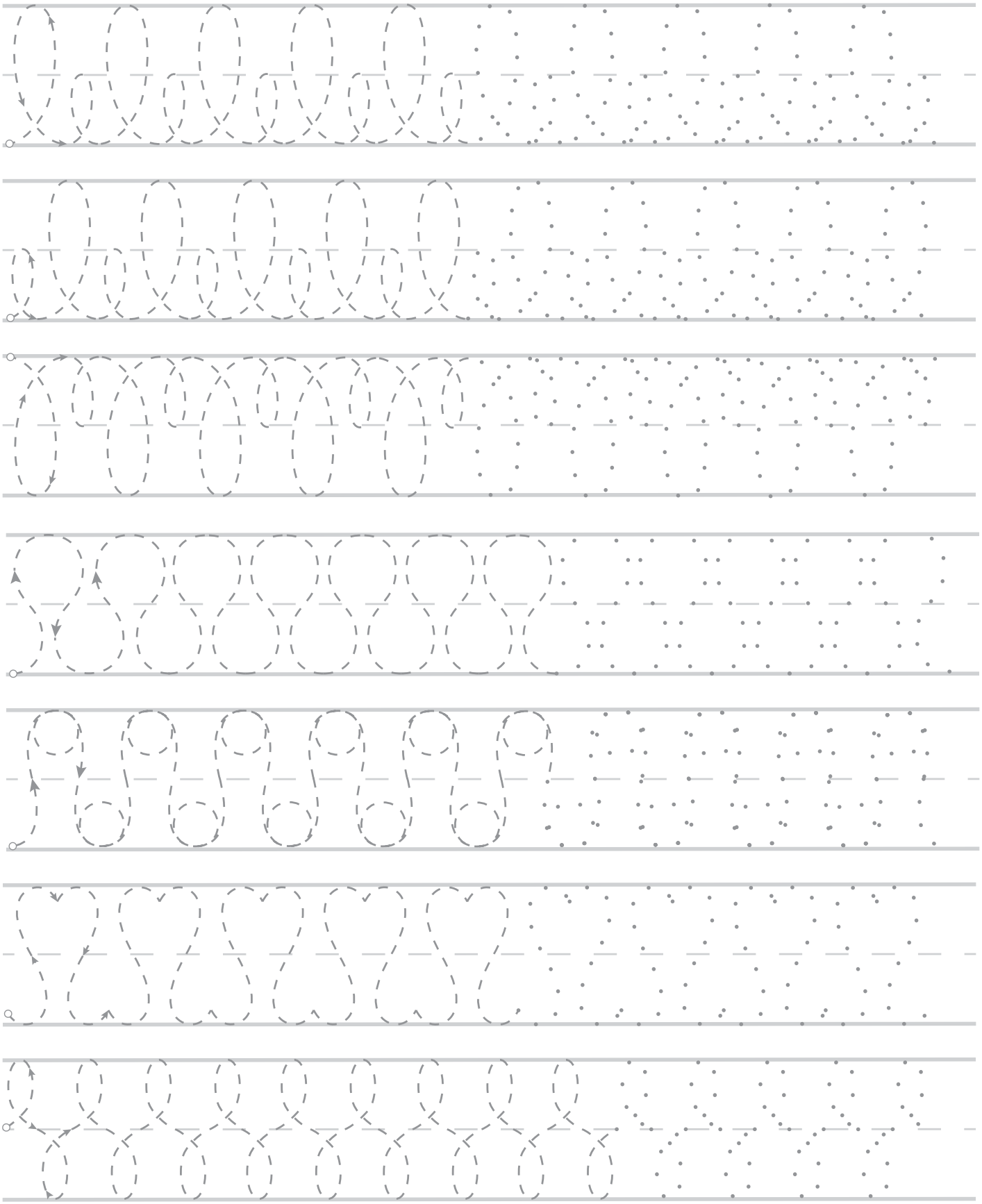

© Grace Company 2025

Placement Template

This sheet shows the placement template. You can copy it and cut or draw on it as much as you want. Although the original placement template that came with your hoop is made of poster board, you can copy your replacements onto normal paper. Normal paper works just fine for placing the quilt top.

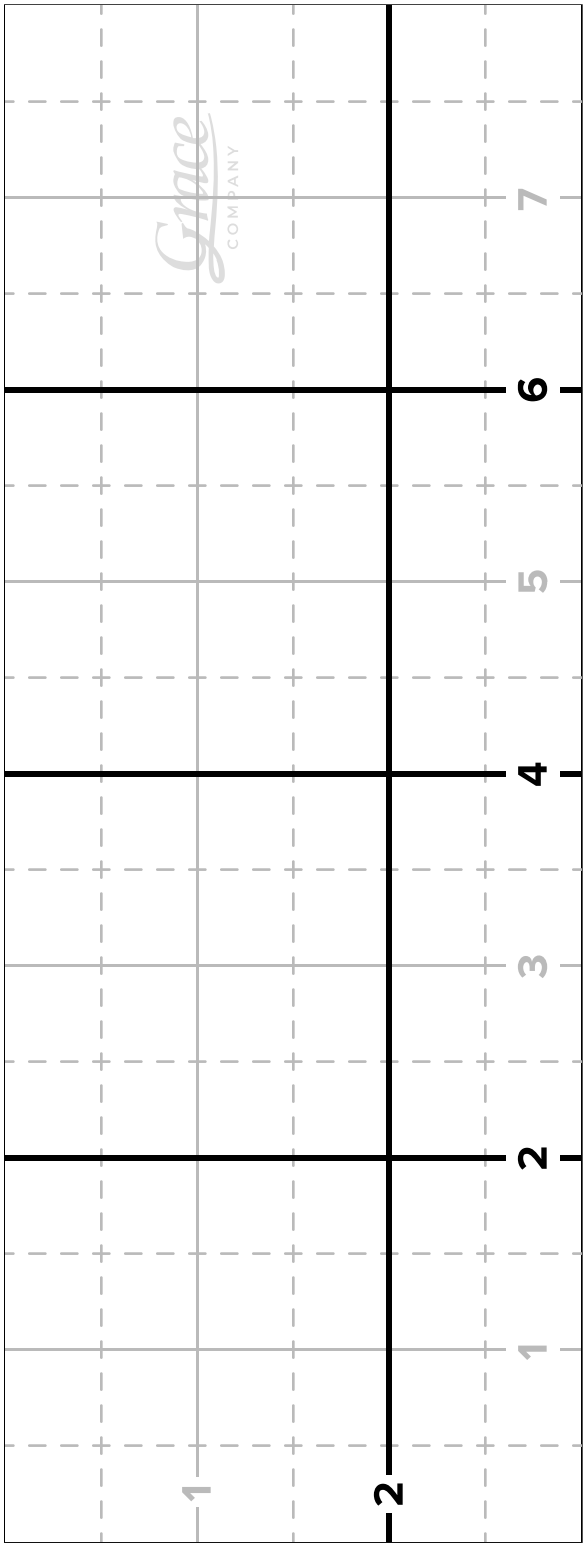

Grace

COMPANY

www.graceframe.com
1-801-485-6688