Little Rebel

Service Manual

Grace COMPANY

Copyright February 21, 2024 V1.1 LR130

Copyright © 2024 Grace Company. All rights reserved. Grace Company reserves the right to make improvements and changes to the product described in this publication at any time and without notice, and may revise this publication occasionally without notice.

Grace Company provides this publication “as-is.” While every attempt at accuracy and clarity has been made in the preparation of this manual and its representation of the product, the publisher and author assume no responsibility for errors, omissions, or any damages as a result of said errors or omissions.

All brand names, publishing activities and trademarks used in this publication are the trademarks, service marks, or trade names of their respective holders.

First Published: March 27, 2024

Last Updated: March 4, 2026

Important Safeguards

When using an electrical appliance, basic safety precautions should always be followed, including the following:

DANGER: To reduce the risk of electric shock, do not leave the machine unattended when plugged in. Always unplug this machine from the electric outlet immediately after using and before cleaning.

WARNING: To reduce the risk of burns, fire, electric shock, or injury to persons:

- This appliance is not to be used by persons (including children) with reduced physical, sensory, or mental capabilities, or lack of experience and knowledge, unless they have been given supervision or instruction concerning the use of the appliance and understand the hazards involved.
- Children should be supervised to ensure that they do not play with the appliance. Children shall not play with the appliance.
- Cleaning and use maintenance shall not be performed by children without supervision.
- Use this machine only for its intended purpose and use as described in this manual. Use only attachments recommended by the manufacturer as contained within this manual.
- Never operate this machine if it has a damaged cord or plug, it is not working properly, or it has been dropped, damaged, or dropped into water. Return the machine to the nearest authorized dealer or service center for examination, repair, or electrical or mechanical adjustment.
- Never operate the machine with any air openings blocked. Keep ventilation openings of the machine freed from the accumulation of lint, dust, and loose cloth.
- Never drop or insert any object into any opening.
- The appliance is intended for indoor use only. Do not use outdoors.
- Do not operate where aerosol (spray) products are being used or where oxygen is being administered.
- Connect this appliance to a properly grounded outlet only. See grounding instructions on the next page.
- To disconnect, turn all controls to the off position, then remove the plug from the outlet by grasping the plug. Do not pull on the cord. Always switch off or unplug the appliance when leaving it unattended.
- Do not unplug by pulling on the cord. To unplug, grasp the plug, not the cord.
- If the supply cord is damaged, it must be replaced by the manufacturer, its service agent or similarly qualified persons in order to avoid a hazard.
- Keep fingers away from all moving parts. Special care is required around the machine needle.
- Always use the proper needle plate. The wrong plate can cause the needle to break.
- Do not use bent or damaged needles.
- Switch the machine off when making any adjustments in the needle area, such as threading the needle, changing the needle, installing the hopping foot or presser foot holder, etc.
- Always unplug the machine from the electrical outlet when removing covers, lubricating, or when making any other user servicing adjustments mentioned in the instruction manual.
- **CAUTION:** In order to avoid a hazard due to inadvertent resetting of the thermal cut-out, this appliance must not be supplied through an external switching device, such as a timer, or connected to a circuit that is regularly switched on and off by the utility.

If you are using this machine in an area with inconsistent input power, it is recommended that you use a surge protector that is connected to a backup battery supply.

These instructions indicate how the sewing machine is intended to be used and how to install the machine.

GROUNDING INSTRUCTIONS

This product must be grounded. In the event of malfunction or breakdown, grounding provides a path of least resistance for electric current to reduce the risk of electric shock. This product is equipped with a cord that has an equipment-grounding conductor and a grounding plug. Plug the cord from the machine into a surge protector. The surge protector must be plugged into an appropriate outlet that is properly installed and grounded in accordance with all local codes and ordinances.

DANGER: Improper connection of the equipment-grounding conductor can result in a risk of electric shock. The conductor with insulation having an outer surface that is green, with or without yellow stripes, is the equipment-grounding conductor. If repair or replacement of the cord or plug is necessary, do not connect the equipment-grounding conductor to a live terminal. Check with a qualified electrician or service person if the grounding instructions are not completely understood, of if in doubt as to whether the product is properly grounded.

Do not modify the plug provided with the product. If it will not fit the outlet, have a proper outlet installed by a qualified electrician.

Grounding Methods

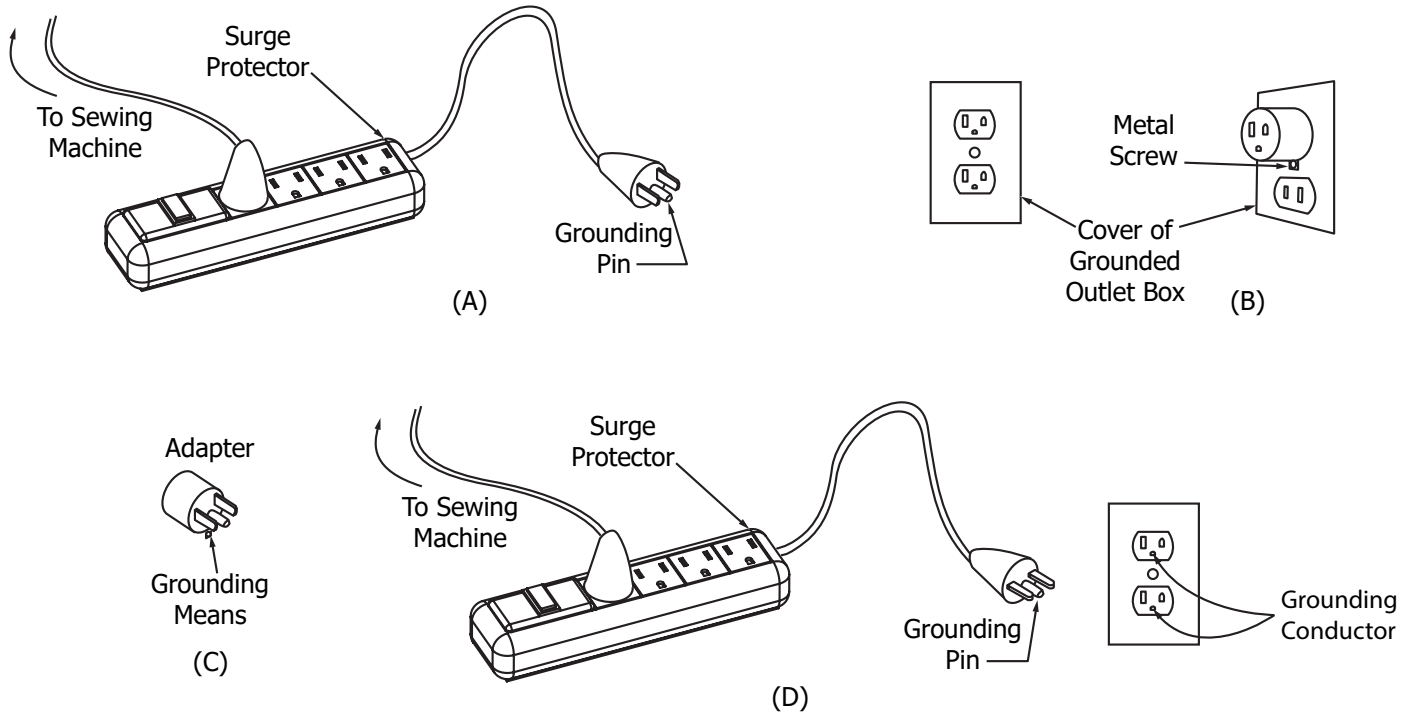

This product is for use on a nominal 120 V circuit, and has a grounding pin as illustrated above (A). A temporary adapter, shown in (B) and (C), may be used to connect this plug to a 2-pole receptacle (B) if a properly grounded outlet is not available. The temporary adapter should be used only until a properly grounded outlet can be installed by a qualified electrician. The green colored rigid ear, lug, and the like, extending from the adapter must be connected to a permanent ground such as a properly grounded outlet box cover. Whenever the adapter is used, it must be held in place by the metal screw.

A qualified electrician should be consulted if there is any doubt as to whether an outlet box is properly grounded.

Contents

Important Safeguards iii
Machine Layout vi
Buttons and Controls viii

Accessing the Internals 1

Remove the Needle Plate 2
Install the Needle Plate 5
Open the Power Supply Cover 10
Close the Power Supply Cover 12
Open the Front Cover 15
Close the Front Cover 16

Replacement Procedures 17

Replace the Bobbin Winder 18
Replace the Needle Plate Sensor Board 21
Replace the Fabric Sensor 28
Replace the Large Thread Tensioner 36

Machine Layout

Main View

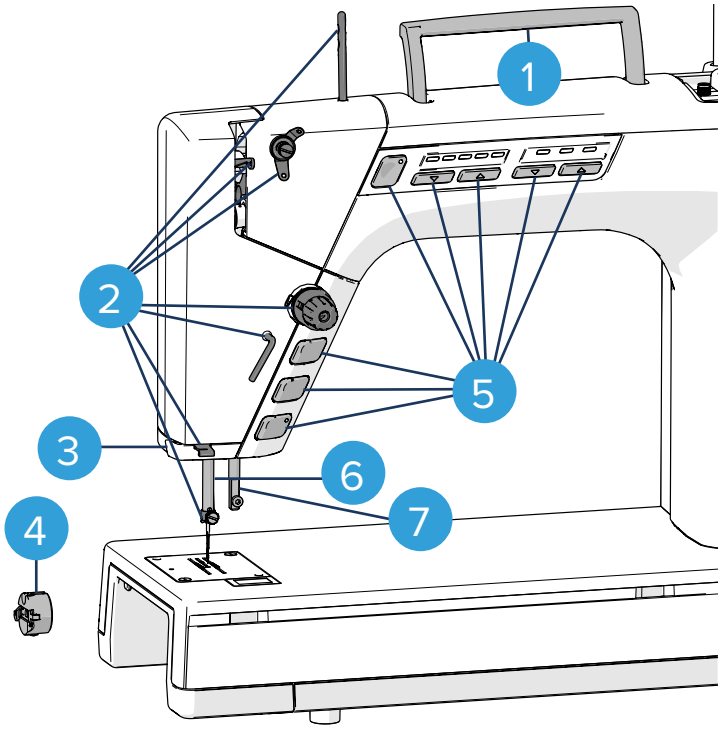

1 **Carrying Handle**
For safely lifting the machine.

2 **Thread Guides and Tensioners**
For threading the machine.

3 **Thread Cutter**
Cuts excess thread from the needle area.

4 **Bobbin Case**
Holds the wound bobbin.

5 **Buttons**
See page viii for functions.

6 **Needle Bar**
Holds and moves the needle.

7 **Presser Bar**
Holds and moves the machine foot.

Sewing Mode View

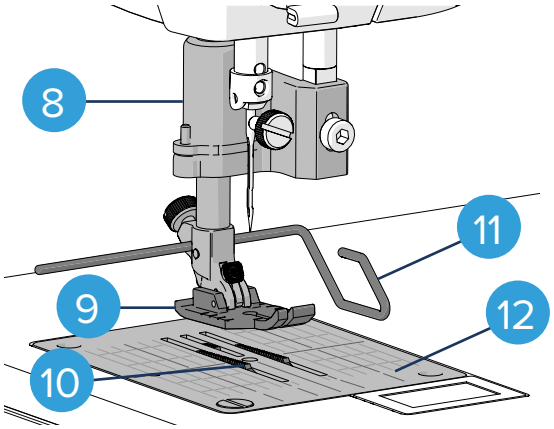

8 **Presser Foot Holder**
Holds the presser foot.

9 **Presser Foot**
Presses the fabric down while sewing.

10 **Feed Dogs**
Feeds fabric under the presser foot.

11 **Seam Guide**
Adjustable guide for seam allowance.

12 **Needle Plate with Markings**
Plate with etched-in measurements.

Quilting Mode View

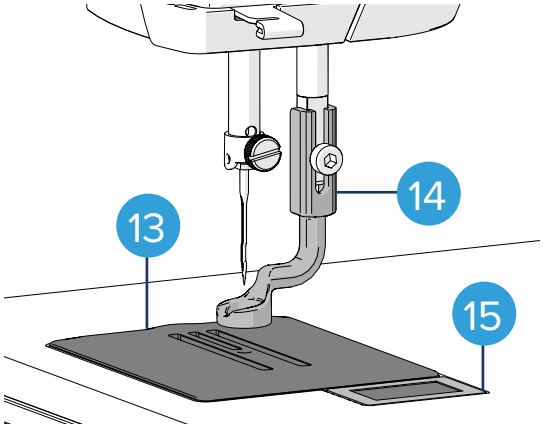

13 **Quilting Plate**
Covers the feed dogs when quilting.

14 **Hopping Foot**
Presses down on the fabric while quilting.

15 **Fabric Sensor**
Detects fabric for stitch regulation.

Back View

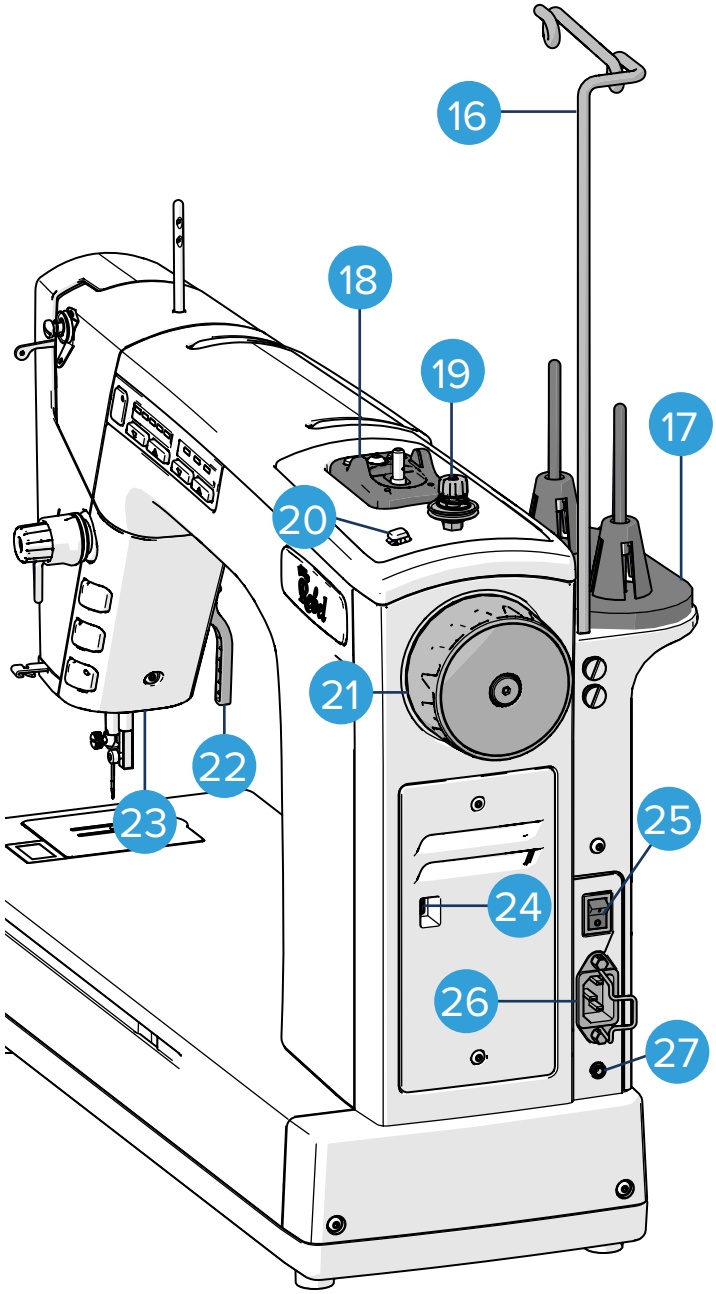

16 **Thread Mast**
Guide for threading and bobbin winding.

17 **Thread Stand**
Holds two thread cones or spools.

18 **Bobbin Winder**
Winds bobbins. Stops automatically.

19 **Bobbin Thread Tensioner**
Tensioner for bobbin winding.

20 **Thread Cutter**
Cuts excess thread from the bobbin winder.

21 **Hand Wheel**
Raises and lowers the needle.

22 **Presser Bar Lever**
Lifts the presser bar.

23 **Overspeed Warning Light**
Turns on if speed of fabric over sensor is too fast for stitch regulation to function optimally.

24 **USB-C Port**
For QCT (automation accessory) attachment.

25 **Power Switch**
Turns the machine on/off.

26 **Power Port with Retainer**
Connects power cord to the machine.

27 **Accessory Port**
For foot pedal or stitch controller cable.

Buttons and Controls

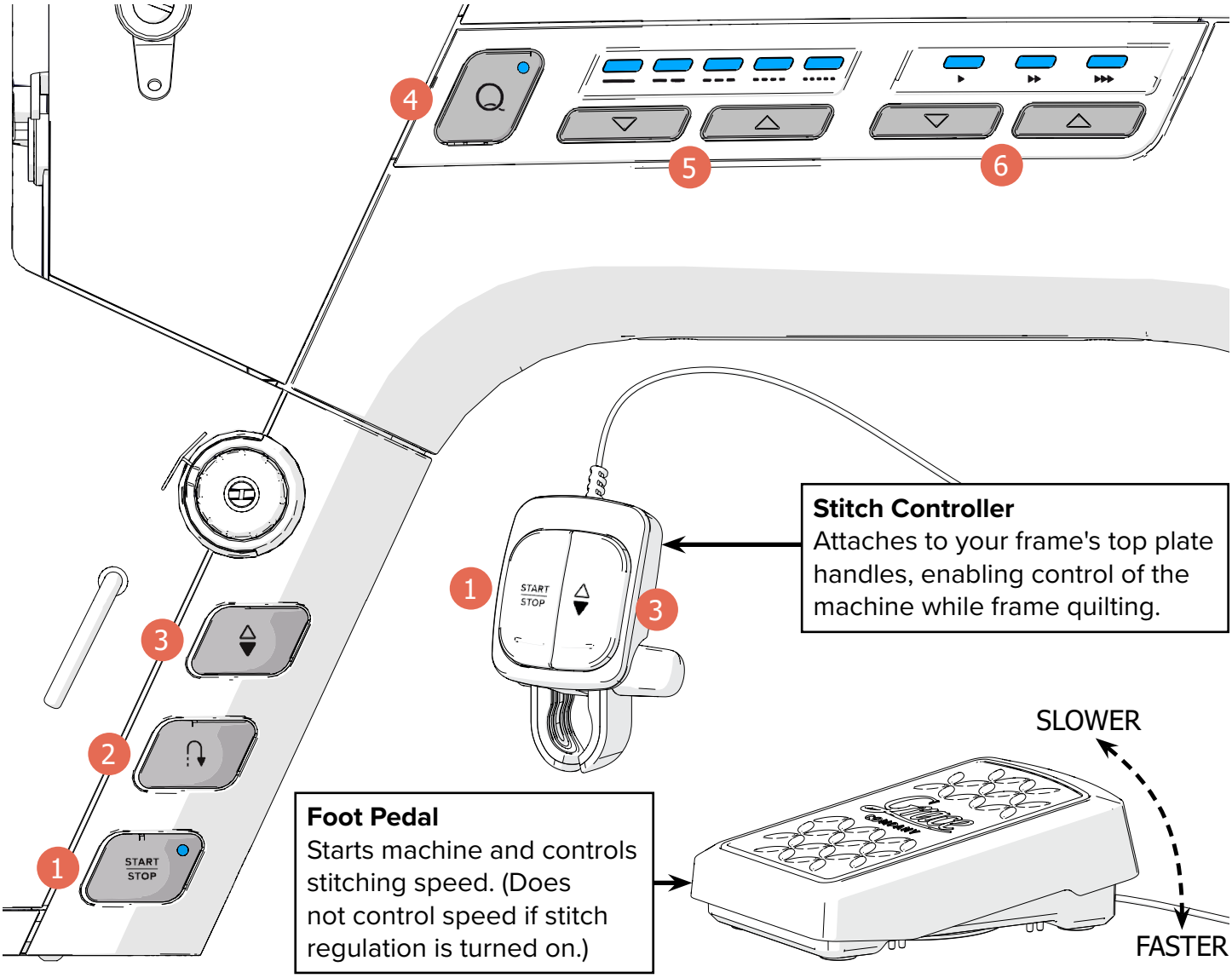

1 **Start/Stop Button**

Press to start stitching at the current speed setting. Press again to stop stitching. (Disabled while foot pedal is plugged in.)

2 **Backstitch Button**

Press once to make a few stitches in reverse. Press and hold to stitch in reverse for as long as the button is held. (Disabled while in Quilting Mode.)

3 **Needle Up/Down Button**

Press once to do a half stitch. Press twice to do a full stitch. Press and hold to change the default needle stop position (up or down).

4 **Q Button**

Press to turn on/off stitch regulation with the fabric sensor. (Disabled while in Sewing Mode.)

5 **Stitch Length Buttons**

Press to adjust the stitches-per-inch (SPI) setting. A higher setting makes smaller stitches. (Disabled while in Quilting Mode with stitch regulation turned off.)

6 **Speed Buttons**

Press to adjust the stitching speed, or the maximum stitching speed if the foot pedal is plugged in. (Disabled while in Quilting Mode with stitch regulation turned on.)

Accessing the Internals

Remove the Needle Plate 2

Install the Needle Plate 5

Open the Power Supply Cover 10

Close the Power Supply Cover 12

Open the Front Cover 15

Close the Front Cover 16

Remove the Needle Plate

Parts & Tools Needed:

Flathead Screwdriver

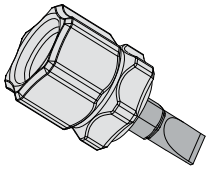

SMP-03-10169

Instructions

Take the following steps to remove the needle plate:

1. **CAUTION:** For your safety, always power off and unplug your machine prior to accessing or interacting with machine internals.

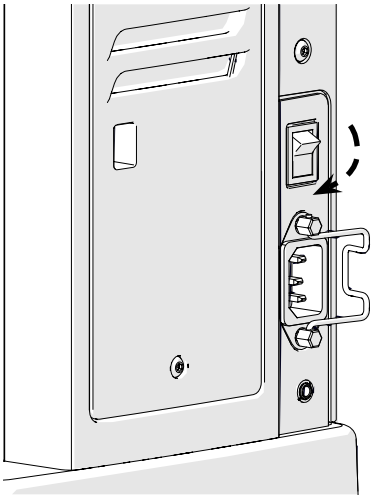

2. Rotate the **hand wheel** until the **needle** is in the highest position.

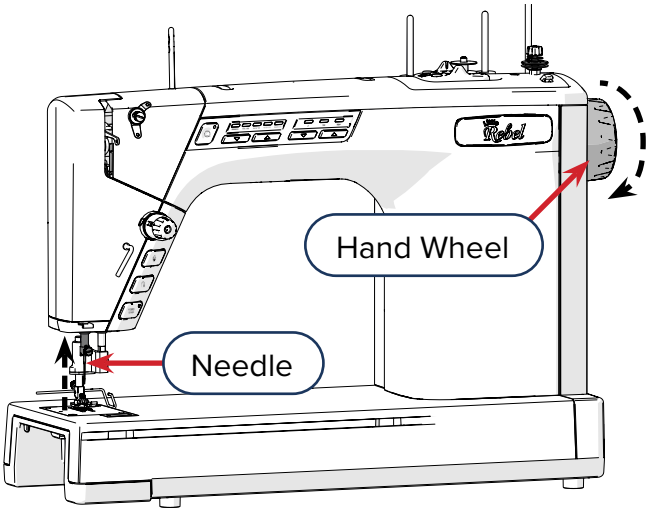

Remove the Needle Plate (continued)

3 Loosen the **needle bar thumb screw** and pull out the needle. If needed, use the flat head screwdriver to loosen the screw.

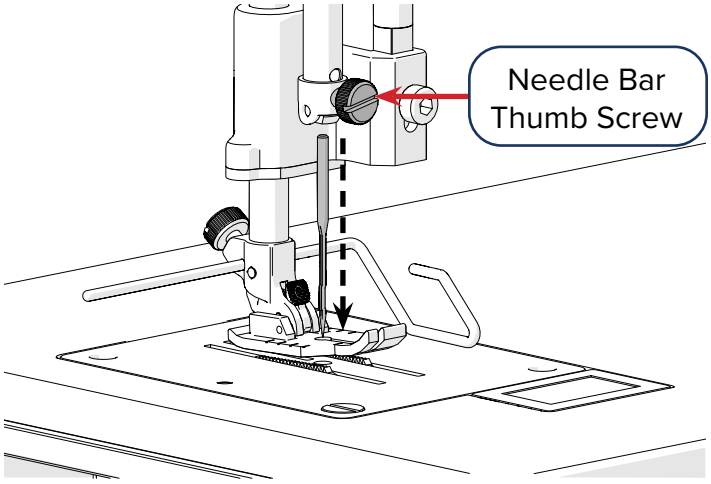

4 The presser bar lever has two positions: **low** and **high**. Lift the presser bar lever to the high position.

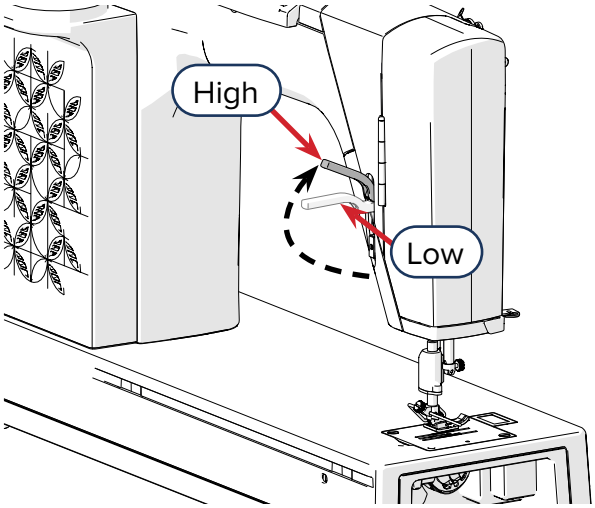

Note: If the quilting plate is installed, remove it.

5 Use a flathead screwdriver to remove the two **needle plate screws** from the needle plate.

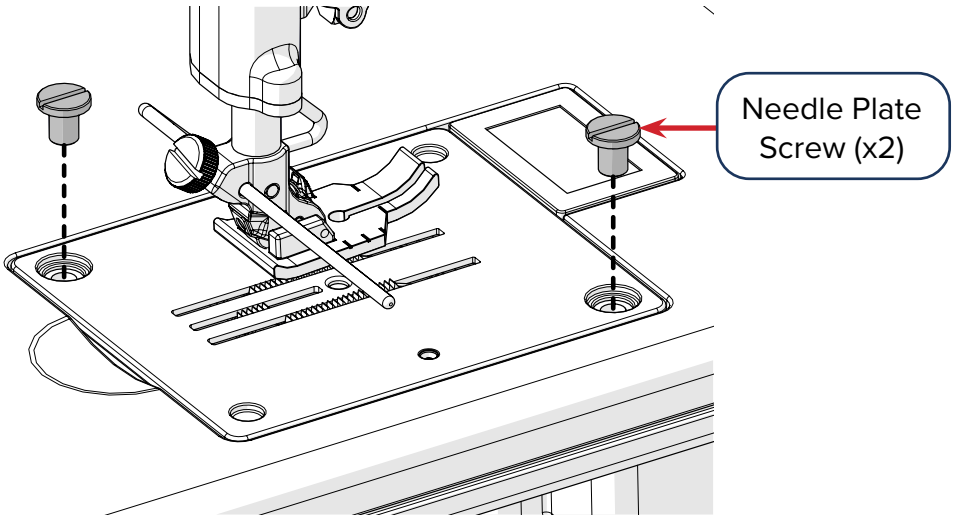

Remove the Needle Plate (continued)

6 Carefully lift the **needle plate** and pull it away from the machine. **IMPORTANT:** There is a **button** underneath the needle plate that can be damaged if too much force is applied to it from the side, so take care that the needle plate doesn't catch on or bang into this button.

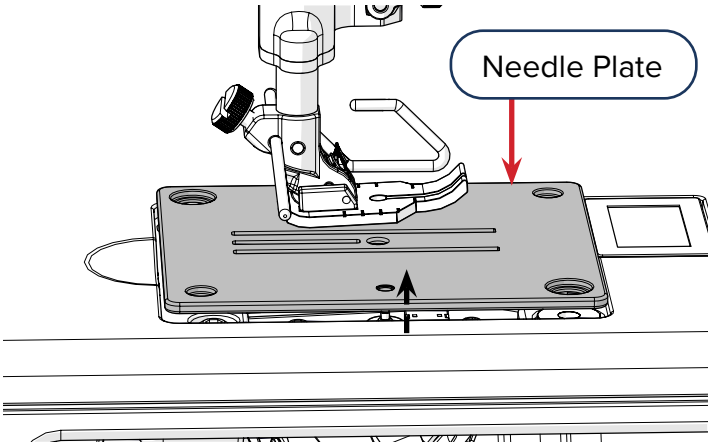

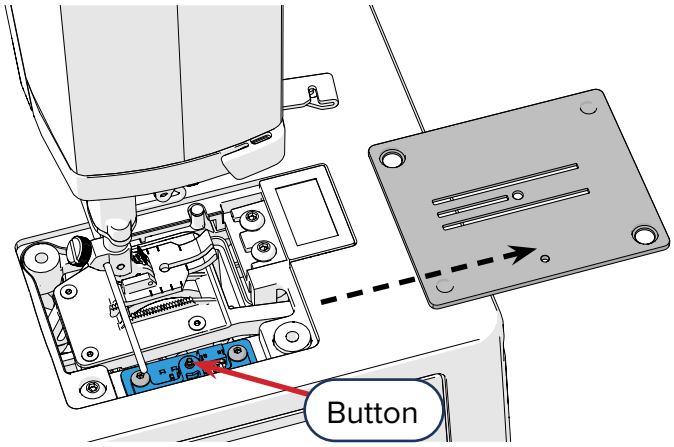

7 **Result:** The needle plate is removed.

Install the Needle Plate

Parts & Tools Needed:

Needle Plate

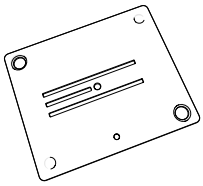

SMP-04-17430

Needle Plate Screw (x2)

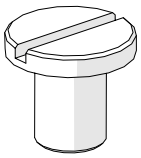

HDW-03-10005

Flathead Screwdriver

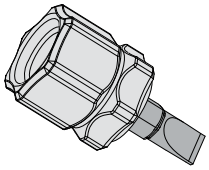

SMP-03-10169

Needle

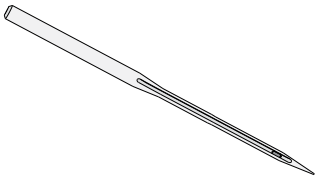

(Removed earlier with needle plate)

Needle Magnet

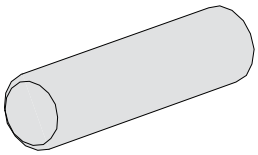

Instructions

Take the following steps to install the needle plate:

1. **CAUTION:** For your safety, always power off and unplug your machine prior to accessing or interacting with machine internals.

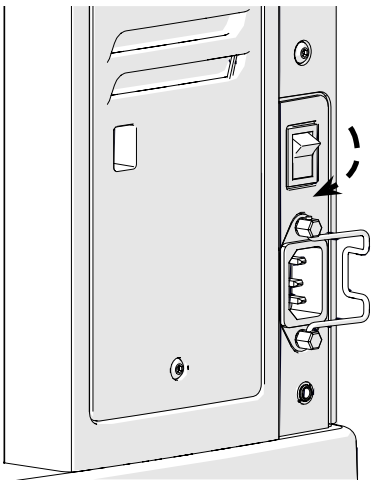

Install the Needle Plate (continued)

2 The presser bar lever has two positions: **low** and **high**. Lift the presser bar lever to the high position.

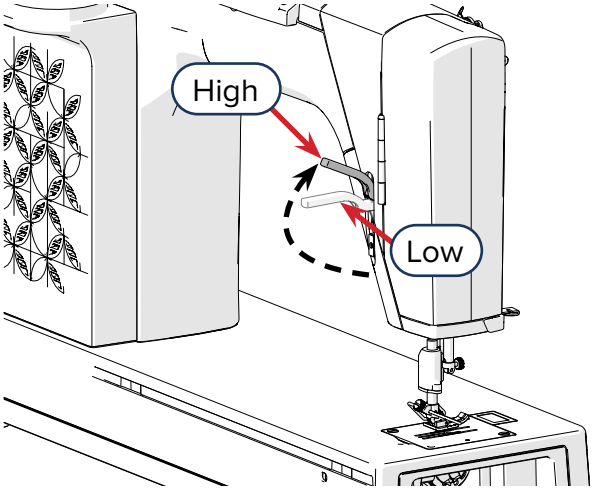

3 Carefully slide the needle plate onto the machine. **IMPORTANT:** Take care that the plate does not bang into or catch on the **button** that pokes up from the needle sensor board. The button can break if it is hit with too much force from the side.

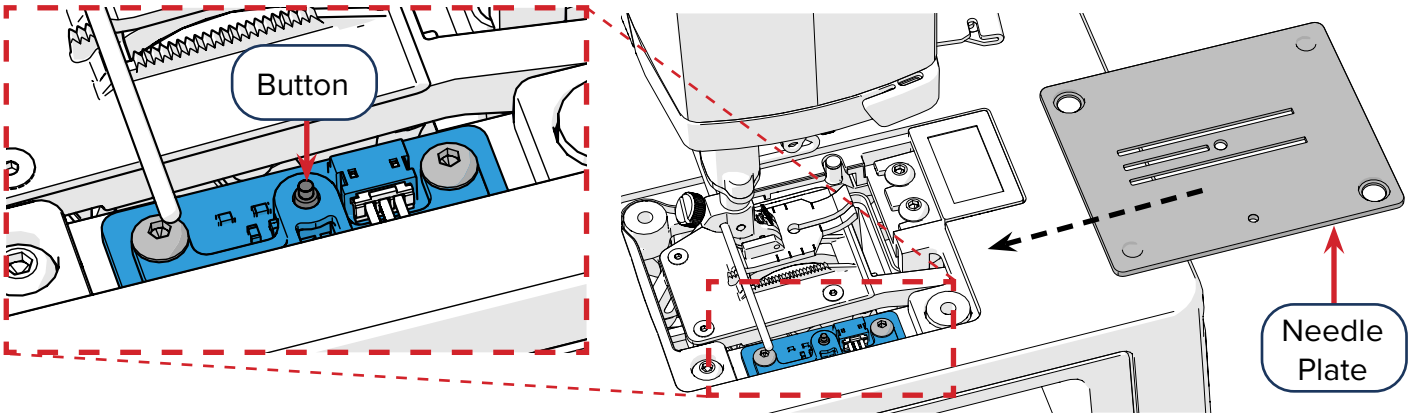

4 Gently set the plate straight down into the indentation.

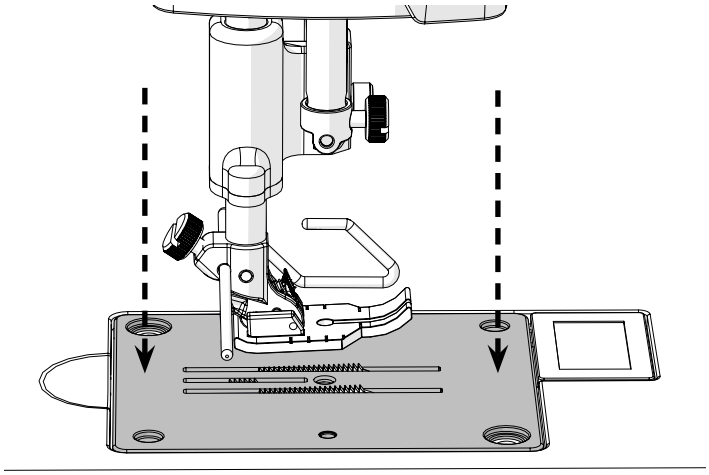

Install the Needle Plate (continued)

5 Insert the **needle plate screws** in the screw holes. Do not tighten.

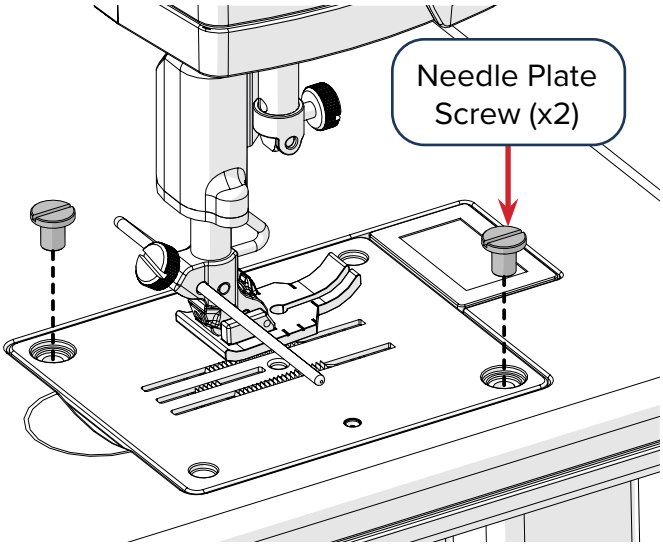

6 Insert the needle into the needle bar. Check the **sight hole** above the screw to make sure the needle is fully inserted.

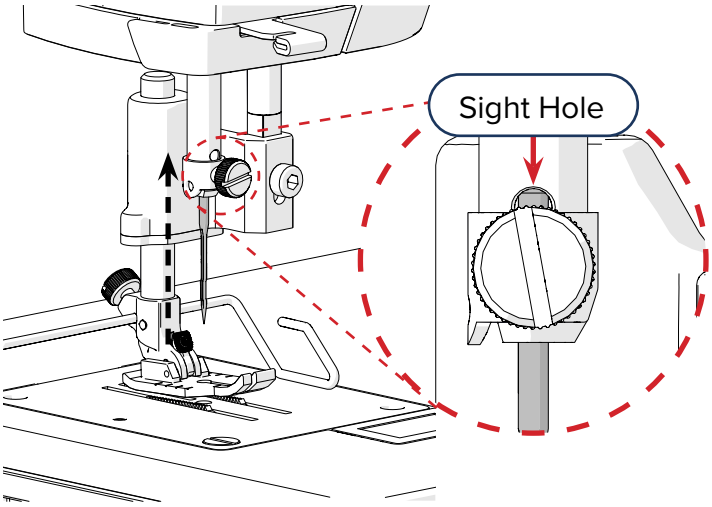

7 Attach the **needle magnet** to the needle, opposite from the **scarf**.

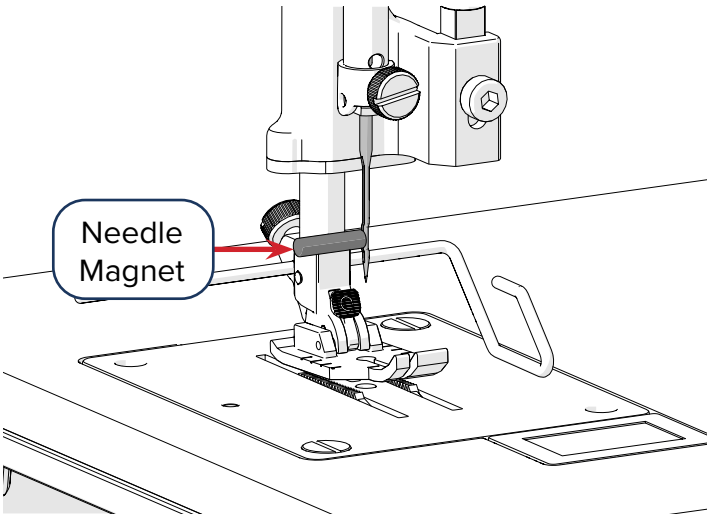

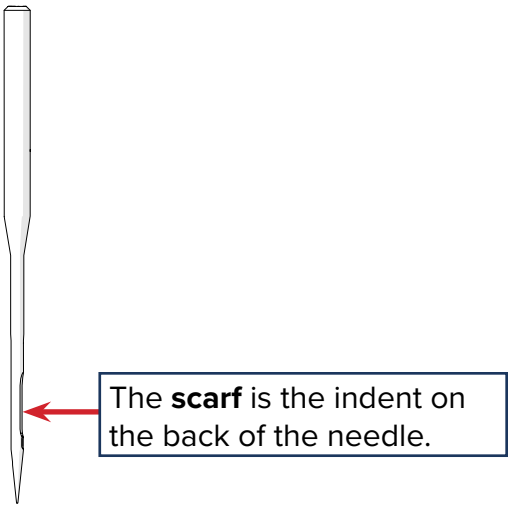

Install the Needle Plate (continued)

8 Turn the needle so that the magnet points as straight as possible away from the **presser bar**.
Note: Move the needle directly. Do not use the magnet to move the needle.

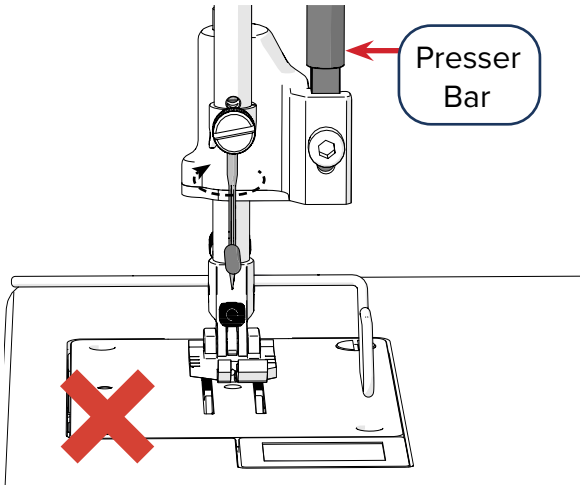

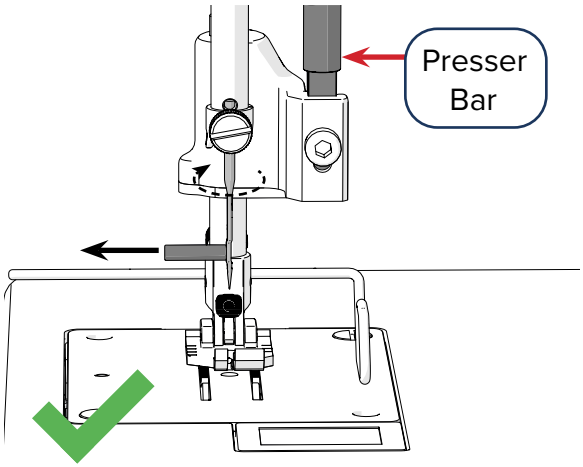

9 Tighten the **needle bar thumb screw**. Do not over-tighten if using the flat head screwdriver.

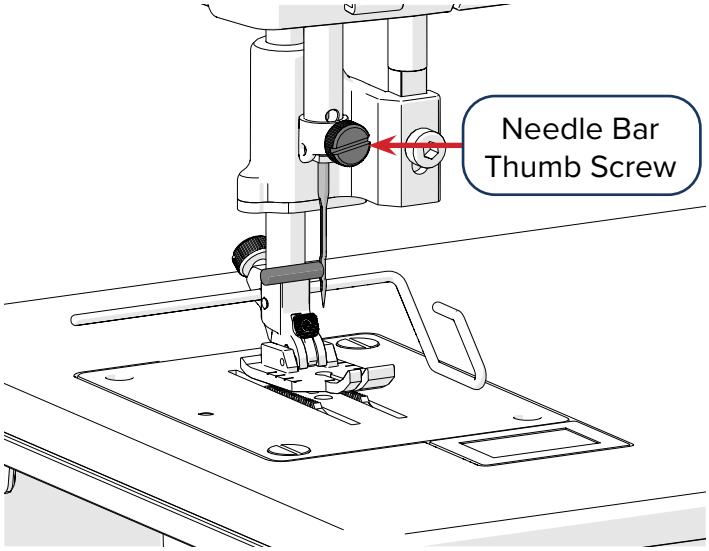

10 Remove the needle magnet.

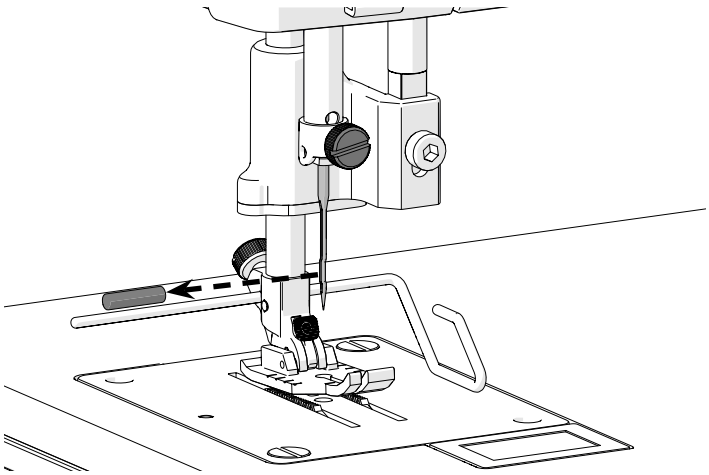

Install the Needle Plate (continued)

11 Use the hand wheel to lower the needle to its lowest position.

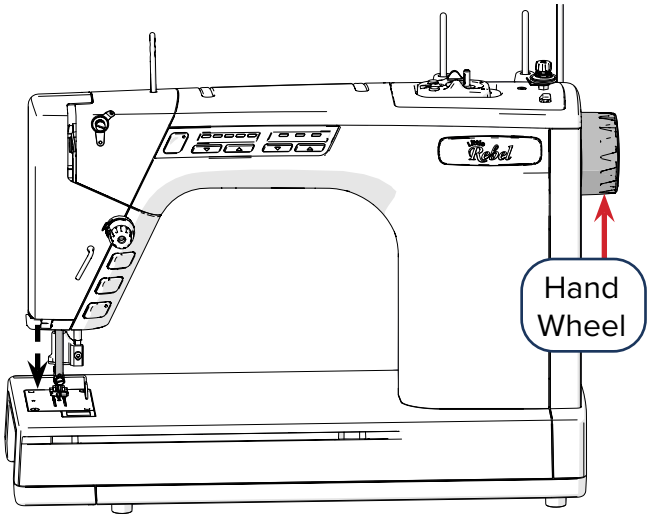

12 Adjust the position of the needle plate to center the needle in the opening.

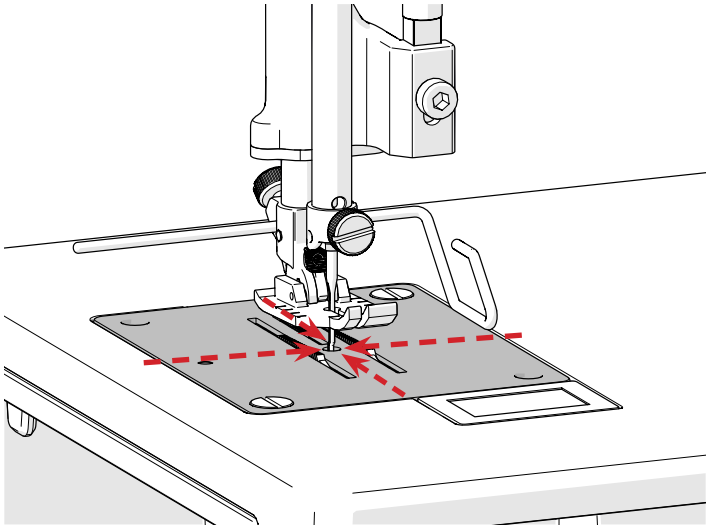

13 Tighten the needle plate screws with the flat head screwdriver till you meet resistance, then one quarter turn more.

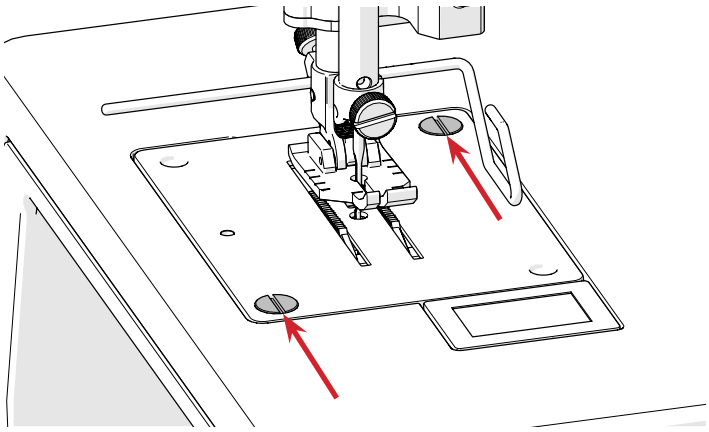

14 **Task Result:** The needle plate is installed.

Open the Power Supply Cover

Parts & Tools Needed:

T-handle Allen Wrench
2.5 mm

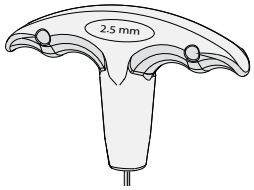

HDW-03-13116

Instructions

Take the following steps to open the power supply cover:

1. **CAUTION:** For your safety, always power off and unplug your machine prior to accessing electrical parts.

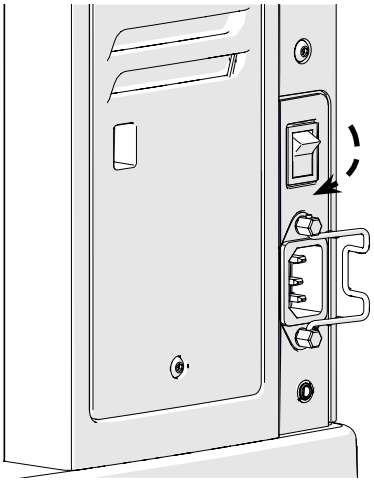

2. Push the **thread stand foam** to expose the two screws.

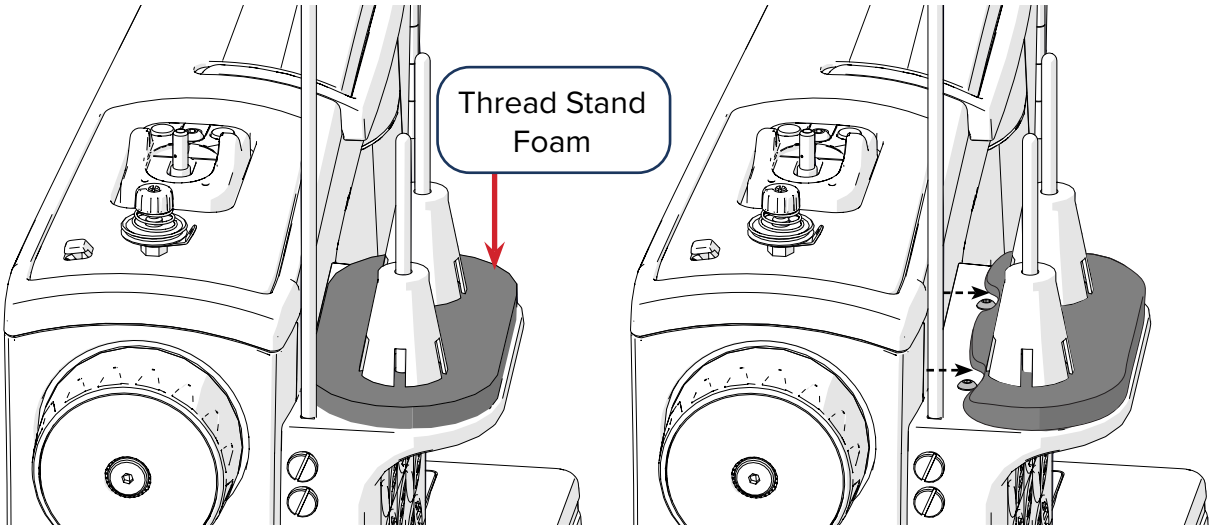

Open the Power Supply Cover (continued)

3 Remove the two **M4 x 8 mm SBHCS** with the 2.5 mm Allen wrench.

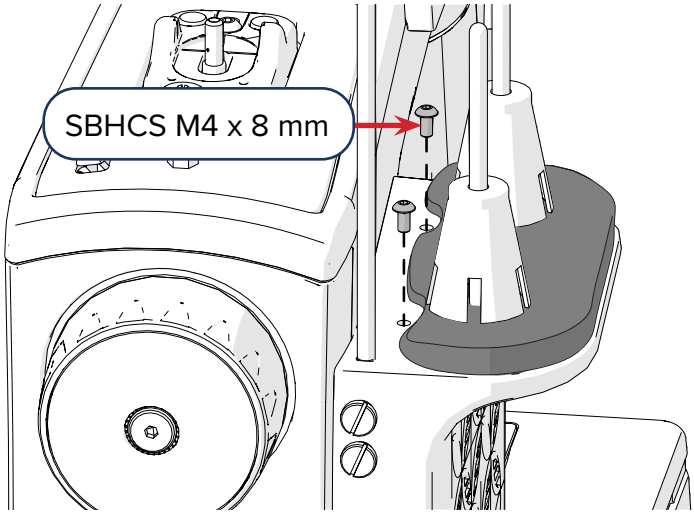

4 Remove the **M4 x 10 mm SBHCS** from the back of the machine, above the power switch.

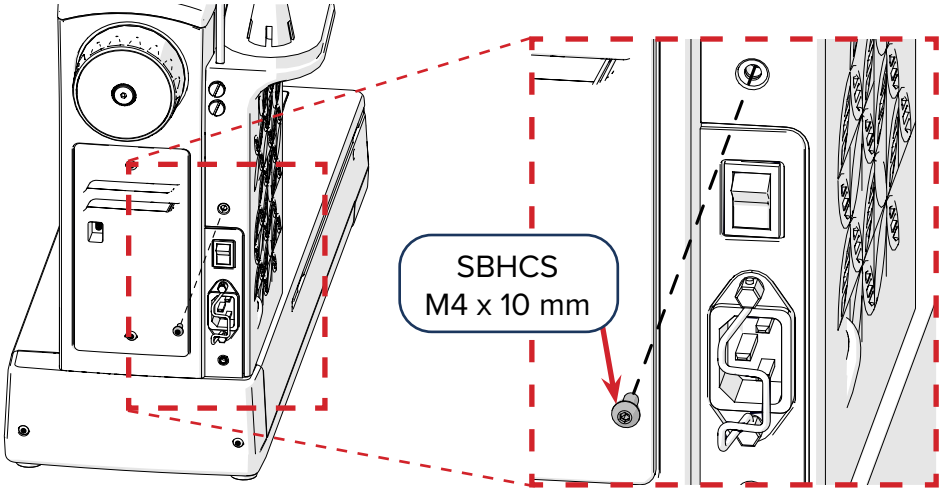

5 Tilt the power supply cover out, and then pull up and out to remove it.

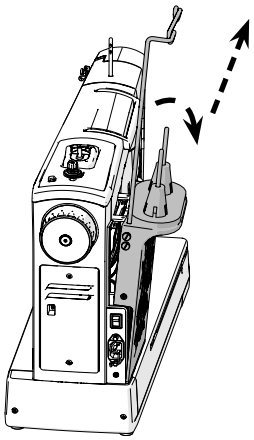

6 **Task Result:** The power supply cover is removed.

Close the Power Supply Cover

Parts & Tools Needed:

Power Supply Cover

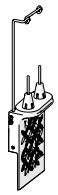

(Removed when cover was opened)

T-handle Allen Wrench
2.5 mm

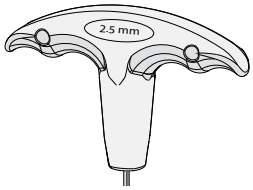

HDW-03-13116

SBHCS
M4 x 10 mm

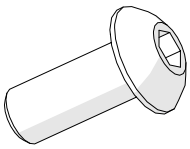

(Removed when cover was opened)

SBHCS
M4 x 8 mm (x2)

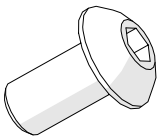

(Removed when cover was opened)

Instructions

Take the following steps to close the power supply cover:

1. Angle the **power supply cover** so the small plastic ridges cross over the lip on the inside of the machine. Make sure the two large **tabs** are centered in the two large **slots**.

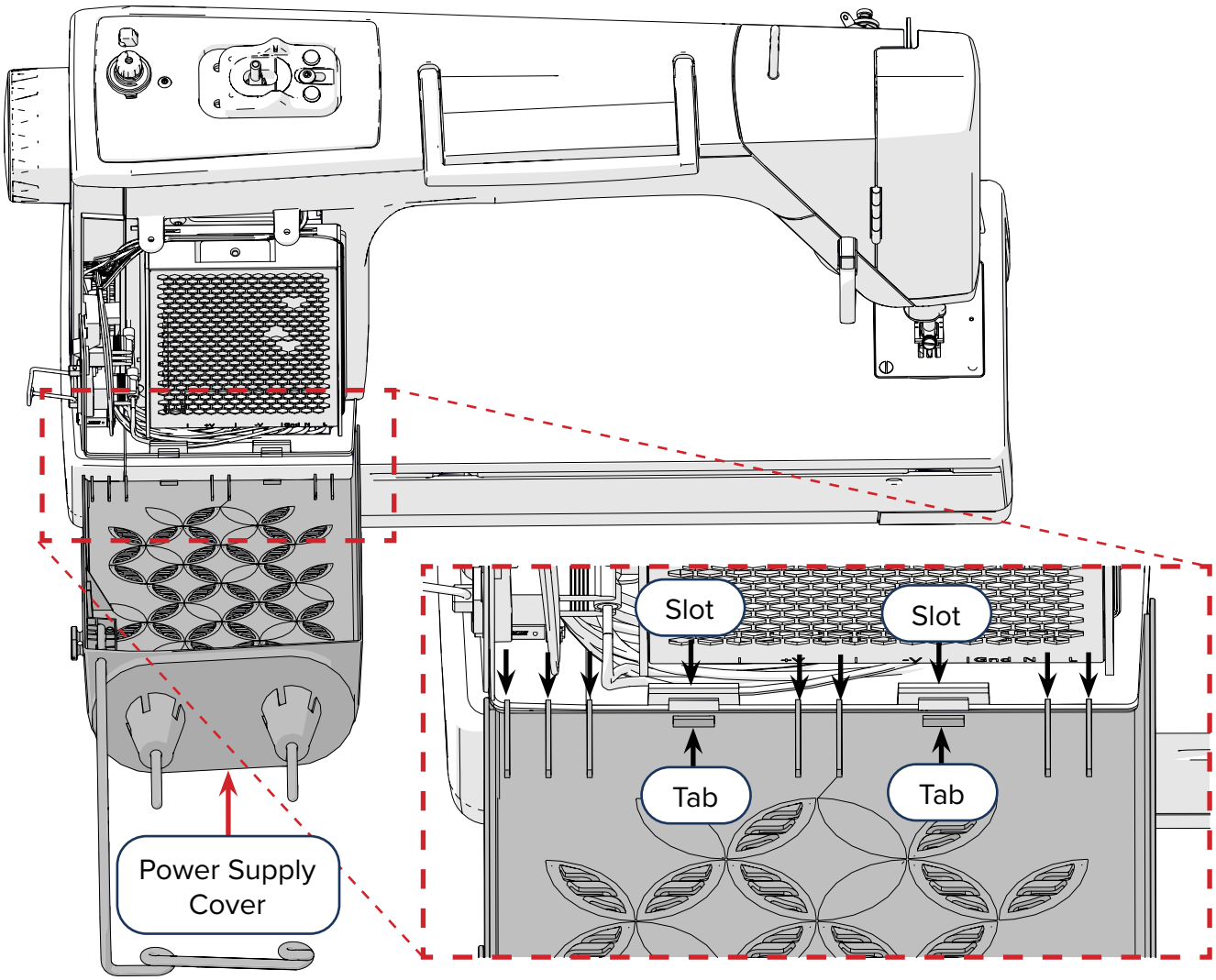

Close the Power Supply Cover (continued)

2 Press down and tip the power supply cover up against the machine. A snap indicates success.

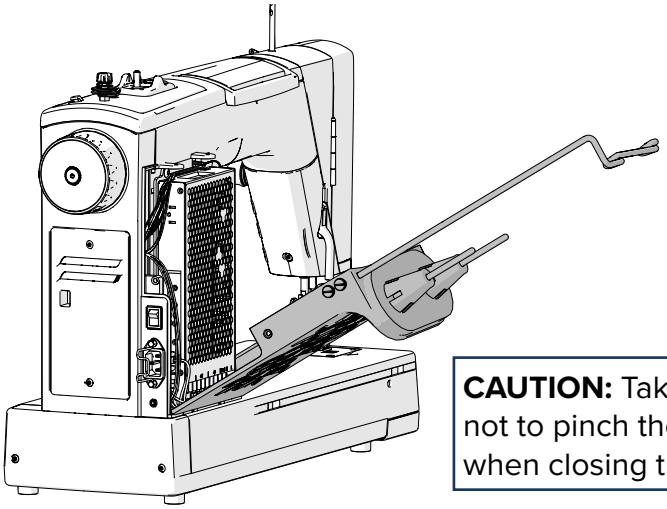

CAUTION: Take care not to pinch the cables when closing the cover.

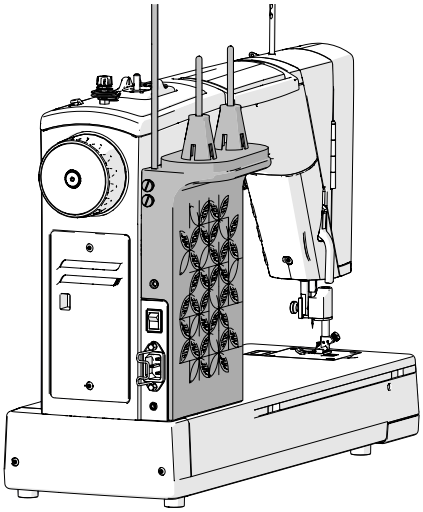

3 Confirm the cover is in place. Look along the bottom seam where the two large tabs and slots meet. A narrow strip of both slots should be visible in the seam. If the two slots are completely invisible, the cover is not on correctly. Pull the cover off and try again.

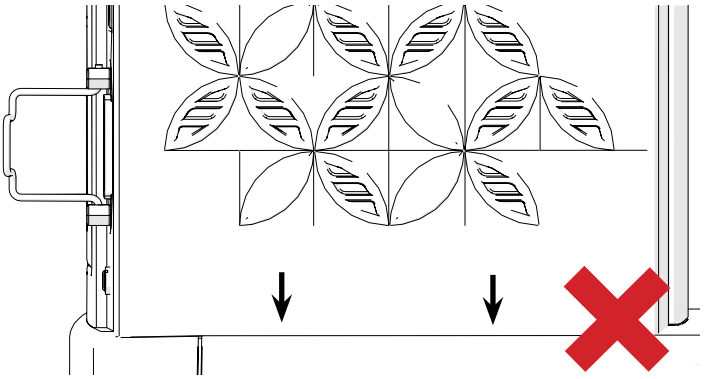

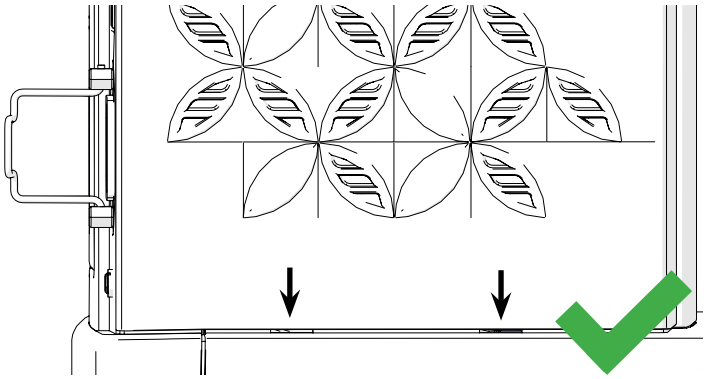

If the slots *are* visible: grab the cover and pull directly upwards. If it slides up at all, the cover is not in place and you must try installing it again. If it does not shift, the cover is in place. Continue to the next step.

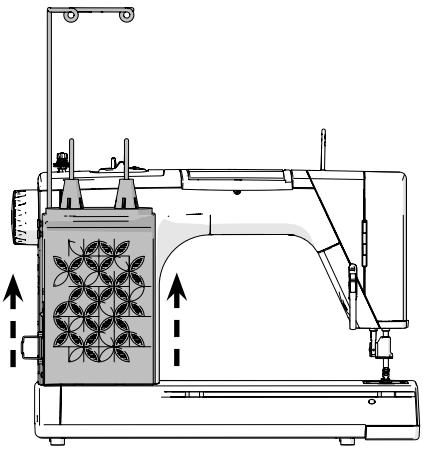

Close the Power Supply Cover (continued)

4. Use a 2.5 mm Allen wrench to install an **M4 x 10 mm SBHCS** into the back of the machine, above the power switch.

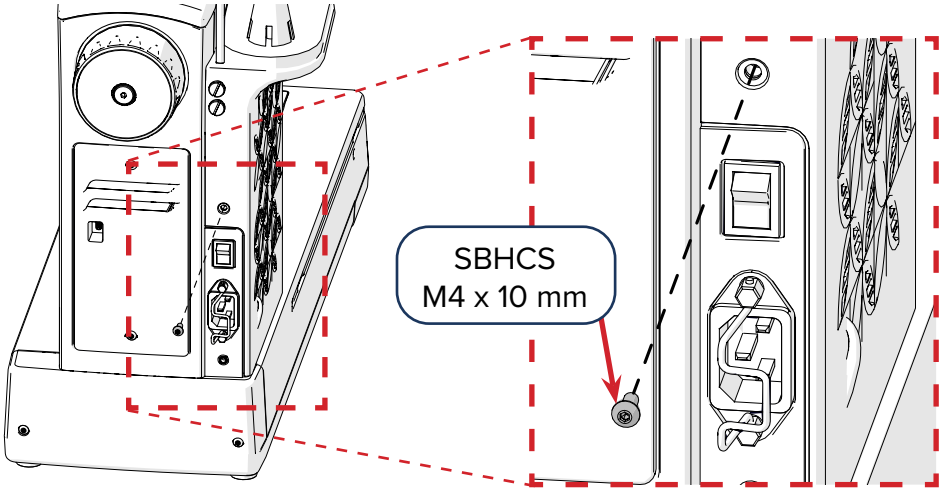

5. Screw two **M4 x 8 mm SBHCS** into the top of the power supply cover, next to the thread stand. If the **thread stand foam** is installed, it must be pushed aside to reveal the screw holes.

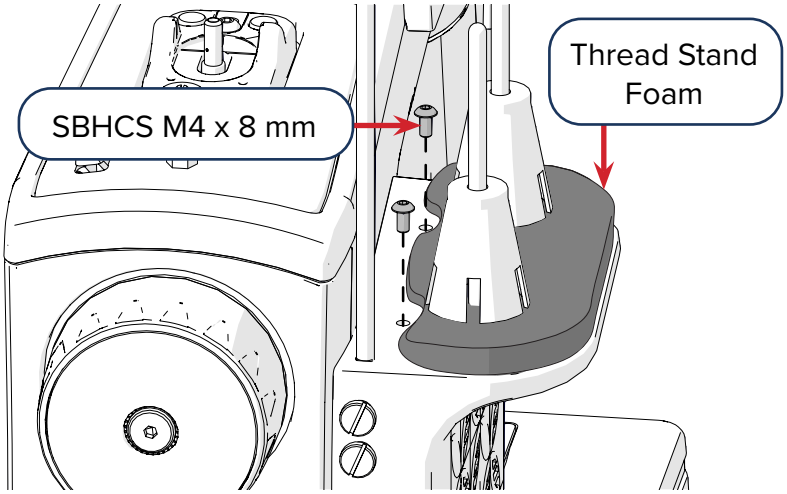

6. **Task Result:** The power supply cover is closed.

Open the Front Cover

Parts & Tools Needed:

No parts or tools are needed to open the front cover of the machine.

Instructions

Take the following steps to open the front cover:

1. **CAUTION:** For your safety, always power off and unplug your machine prior to accessing machine internals.

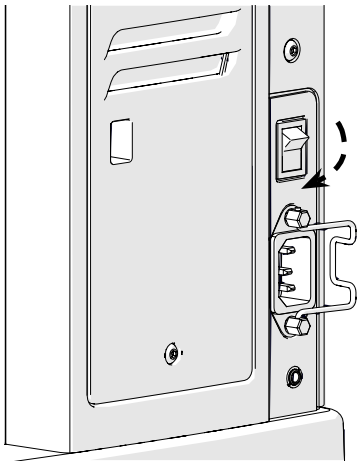

2. Pull the front cover forward and to the left to open it.

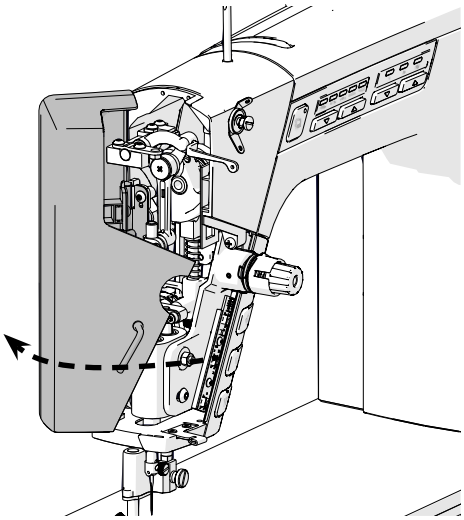

Close the Front Cover

Instructions

To close the front cover, swing the cover forward and to the right. Press it into the machine.

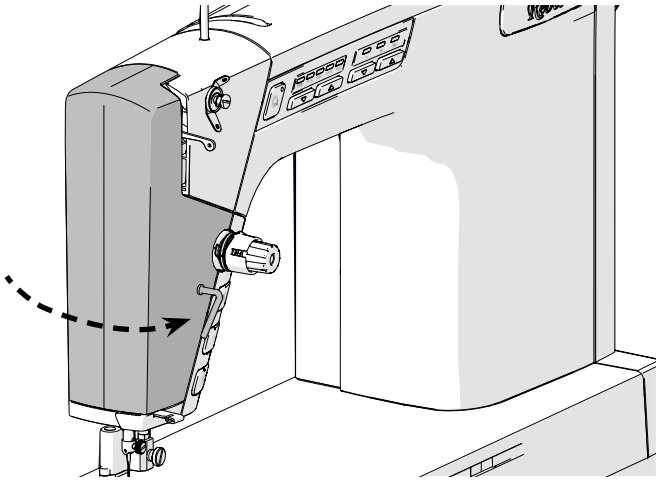

Replacement Procedures

Replace the Bobbin Winder 18

Replace the Needle Plate Sensor Board 21

Replace the Fabric Sensor 28

Replace the Large Thread Tensioner 36

Replace the Bobbin Winder

Parts & Tools Needed:

Bobbin Winder Assembly SM13

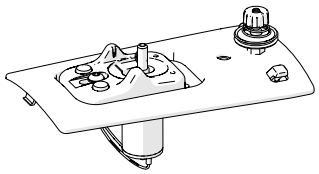

SMP-09-17633

T-handle Allen Wrench 2.5 mm

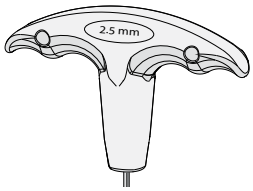

HDW-03-13116

Instructions

Take the following steps to remove and replace the broken bobbin winder:

1. **CAUTION:** For your safety, always power off and unplug your machine prior to removing or reinstalling electrical parts.

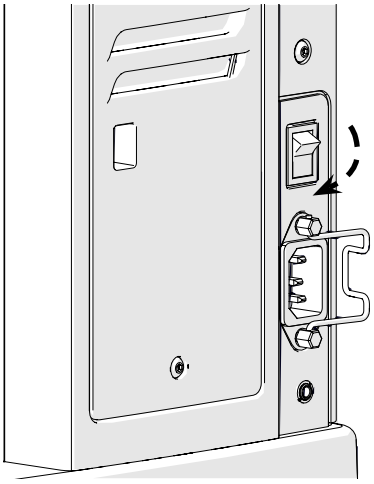

2. Use a 2.5 mm Allen wrench to remove the **M4 x 20 mm SBHCS** from the top of the machine, in front of the **bobbin thread tensioner**.

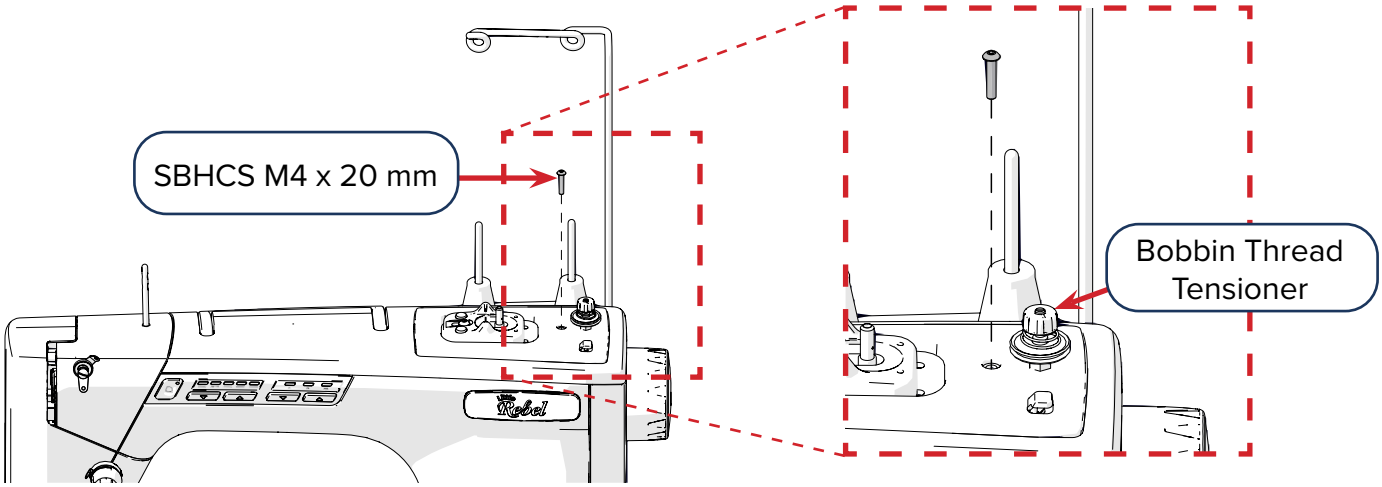

Replace the Bobbin Winder (continued)

3 Lift the **old bobbin winder assembly** at an angle up and toward the back of the machine. **CAUTION:** The bobbin winder is plugged into the machine, so pull carefully to avoid damaging the wires.

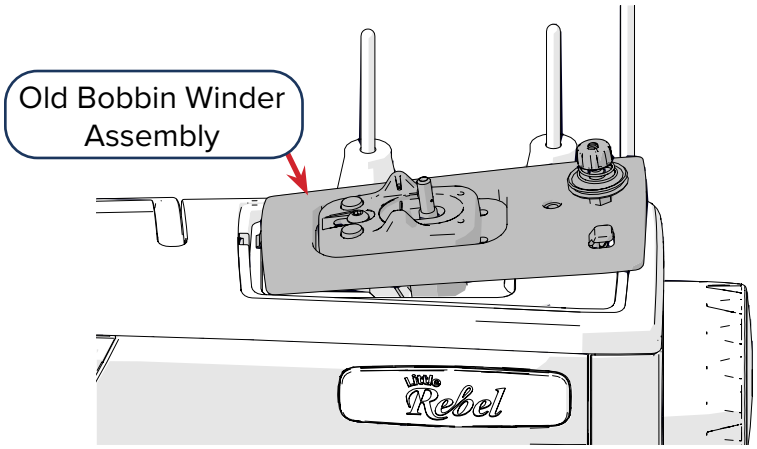

4 Disconnect the **white cable** from the bobbin winder, which is attaching it to the machine.

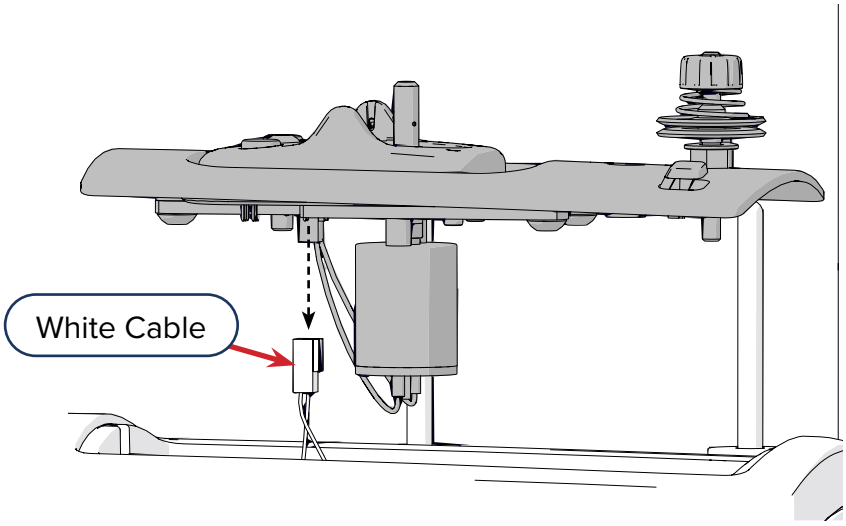

CAUTION: Do not pull directly on the cords. Unplug the cable by the plastic end.

5 Orient the **new bobbin winder** so the **tensioner** is toward the back of the machine and plug the white cable into the new bobbin winder.

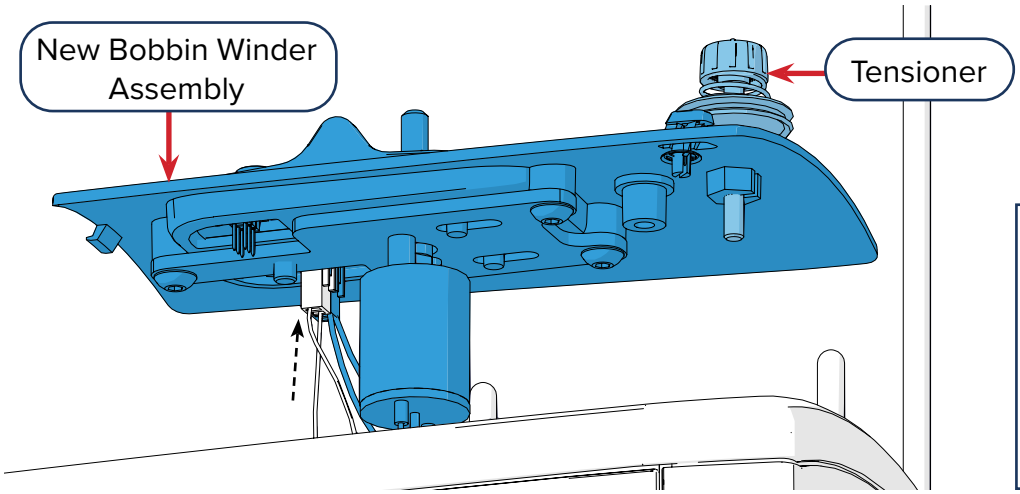

CAUTION: Do not force the cable into the port. If it seems like force is necessary, the cable is probably not oriented correctly. Try flipping it around.

Replace the Bobbin Winder (continued)

6 Insert the bobbin winder so the **motor** aligns with the **cavity** in the machine. Press the **tab** at the front into the **slot** in the machine's top plastic. **IMPORTANT:** Take care not to pinch the cables.

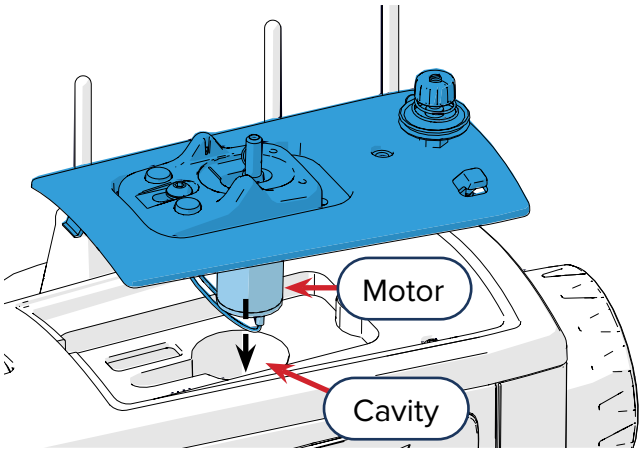

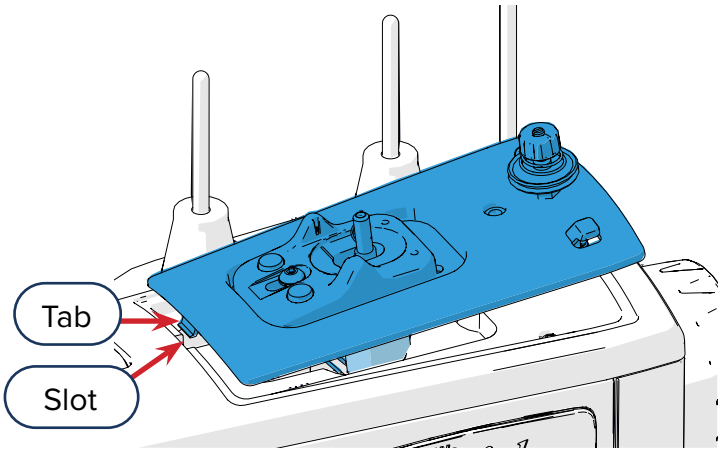

7 Secure the bobbin winder in place using the **M4 x 20 mm SBHCS** you removed earlier and the 2.5 mm Allen wrench.

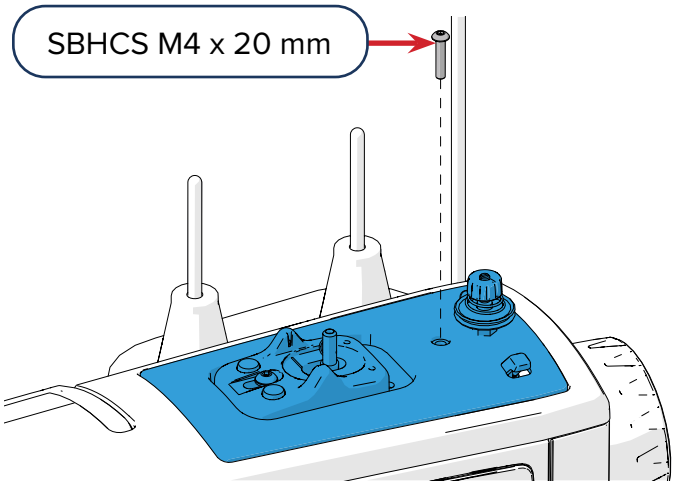

8 **Task Result:** The bobbin winder is replaced.

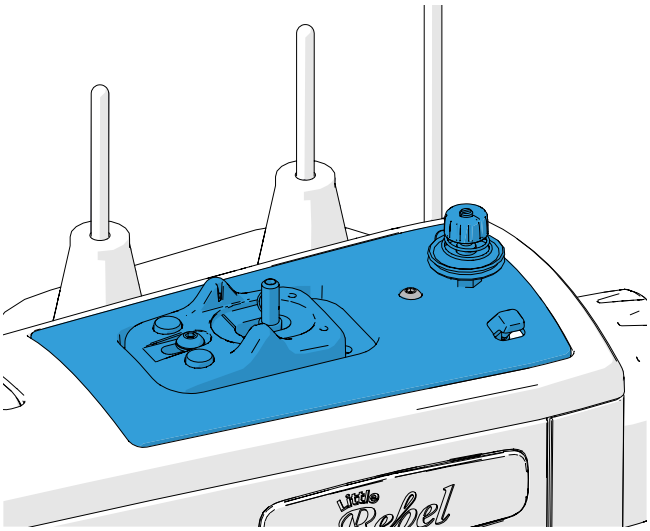

Replace the Needle Plate Sensor Board

Parts & Tools Needed:

Needle Plate Sensor Board

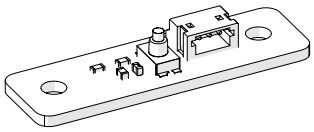

SMP-02-17613

Needle Magnet

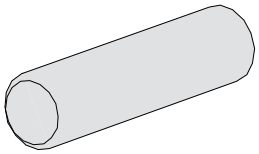

Flathead Screwdriver

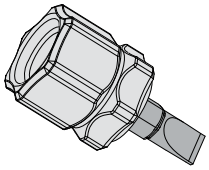

SMP-03-10169

Allen Wrench 2 mm

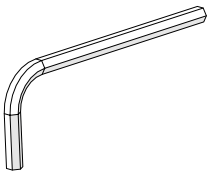

Note: The T-handle Allen wrench that came with your machine is not recommended for this procedure because it is too bulky.

Instructions

Take the following steps to replace the needle sensor board:

1. **CAUTION:** For your safety, always power off and unplug your machine prior to removing or reinstalling electrical parts.

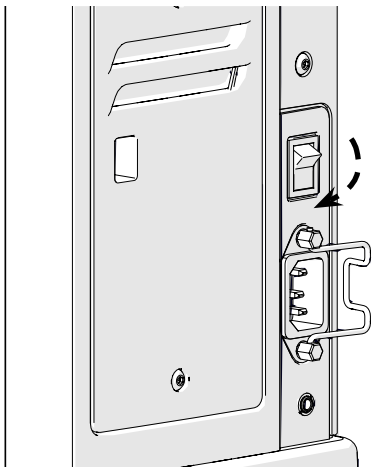

2. Rotate the **hand wheel** until the **needle** is in the highest position.

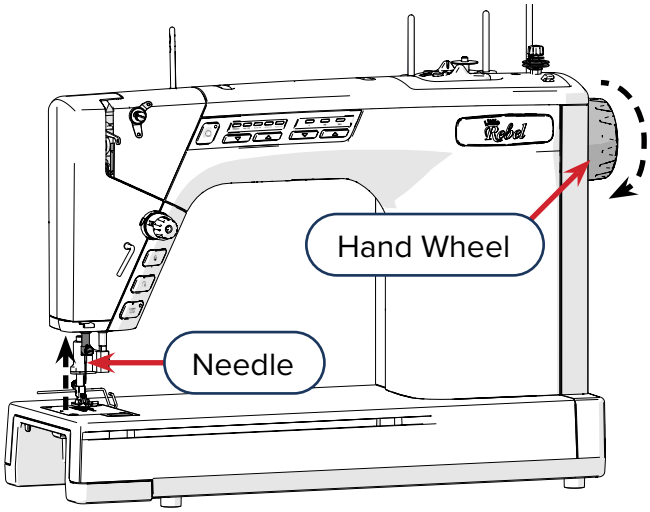

Replace the Needle Plate Sensor Board (continued)

3 Loosen the **needle bar thumb screw** and pull out the needle. If needed, use the flat head screwdriver to loosen the screw.

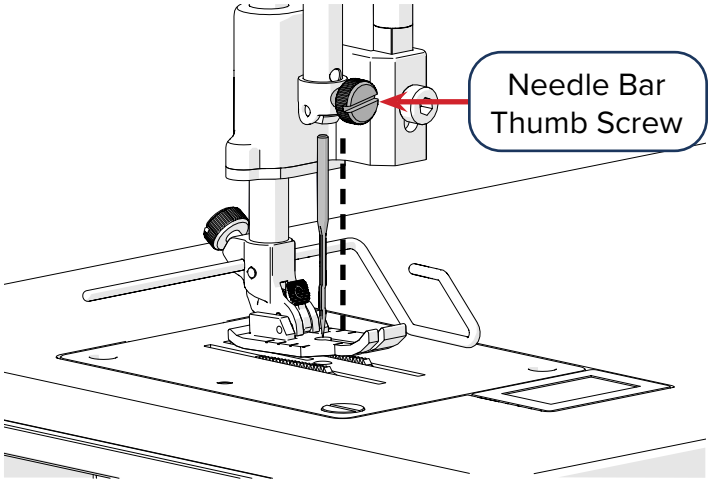

4 The presser bar lever has two positions: **low** and **high**. Lift the presser bar lever to the high position.

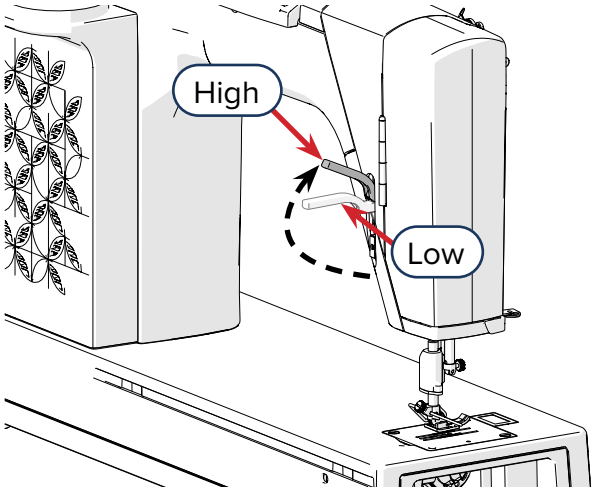

Note: If the quilting plate is installed, remove it.

5 Use a flathead screwdriver to remove the two **needle plate screws** from the needle plate.

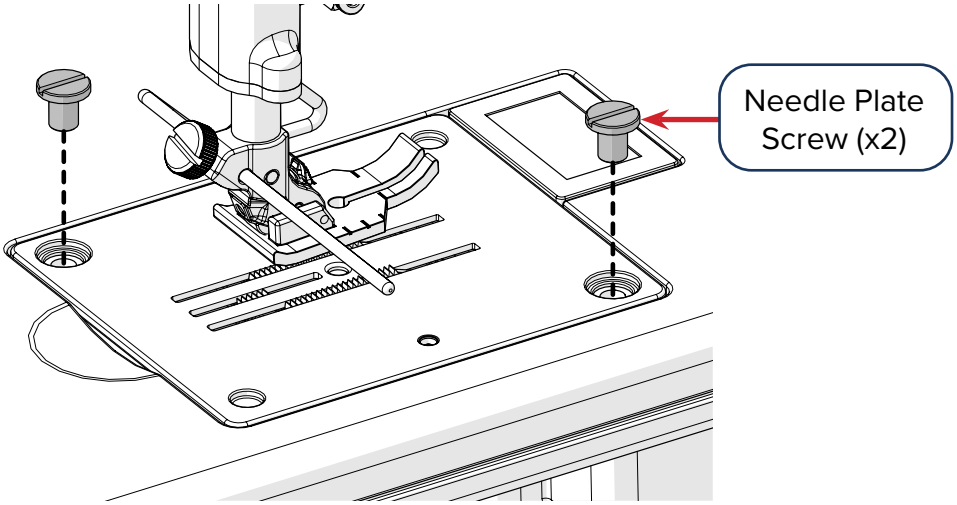

Replace the Needle Plate Sensor Board (continued)

6 Carefully lift the **needle plate** and pull it away from the machine. **IMPORTANT:** There is a **button** underneath the needle plate that can be damaged if too much force is applied to it from the side, so take care that the needle plate doesn't catch on or bang into this button.

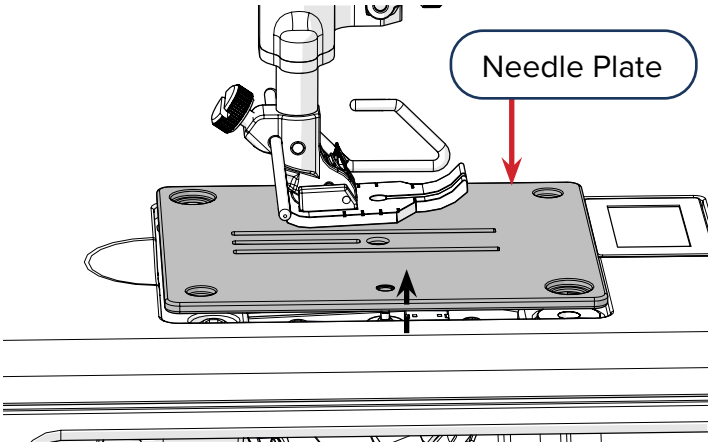

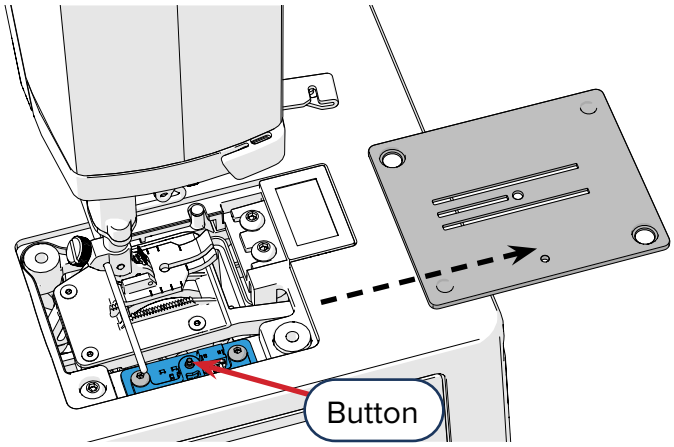

7 Remove the two **M3 x 8 mm SBHCS** on the front of the machine using a 2 mm Allen wrench.

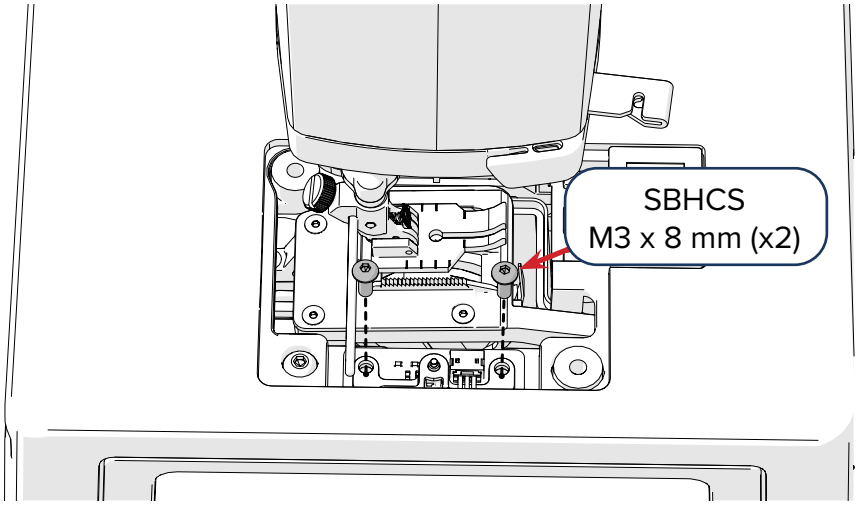

8 Gently lift the old **needle plate sensor board**. Unplug the **cable** leading into the machine.

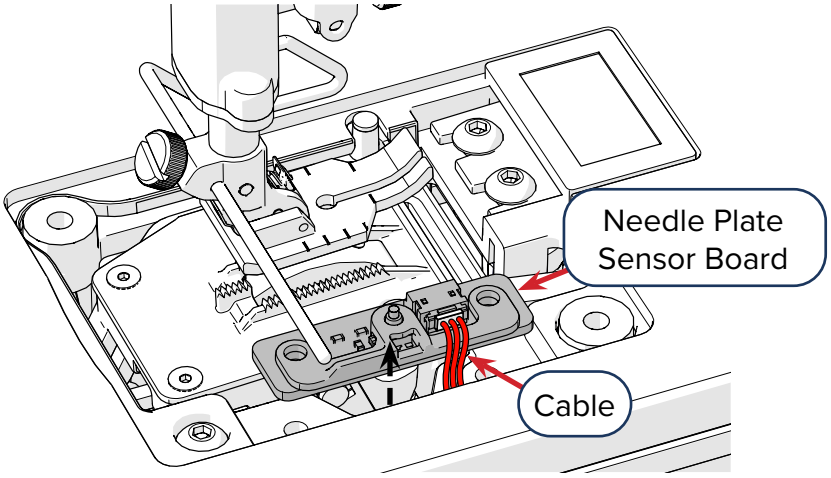

CAUTION: Do not pull directly on the cords. Unplug the cable by the plastic end.

Replace the Needle Plate Sensor Board (continued)

9 Plug the **new needle plate sensor board** into the machine.

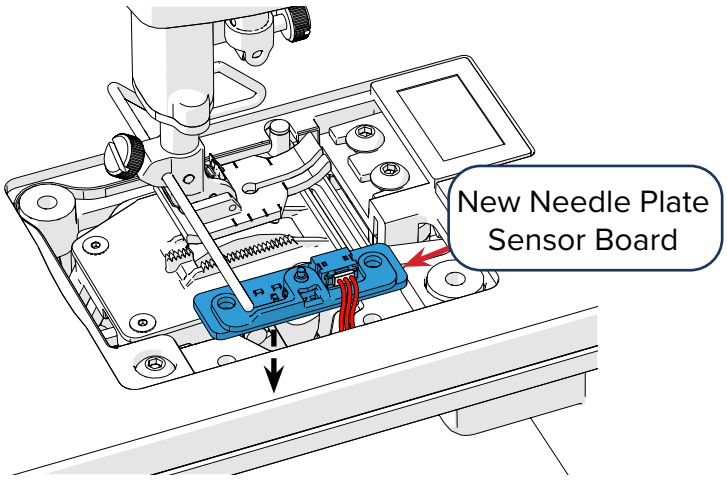

CAUTION: Do not force the cable. The plastic tab on the cable can break if pushed into the part incorrectly. If it seems like force is necessary, the cable is probably not oriented correctly. Try flipping it around.

10 Attach the sensor board with two **M3 x 8 mm SBHCS** and the 2 mm Allen wrench.

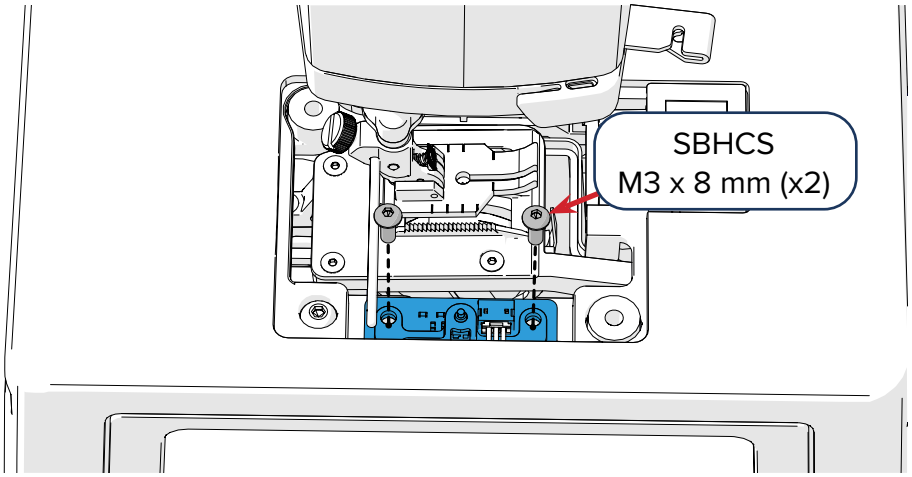

11 Carefully slide the needle plate onto the machine. **IMPORTANT:** Take care that the plate does not bang into or catch on the **button** that pokes up from the needle sensor board. The button can break if it is hit with too much force from the side.

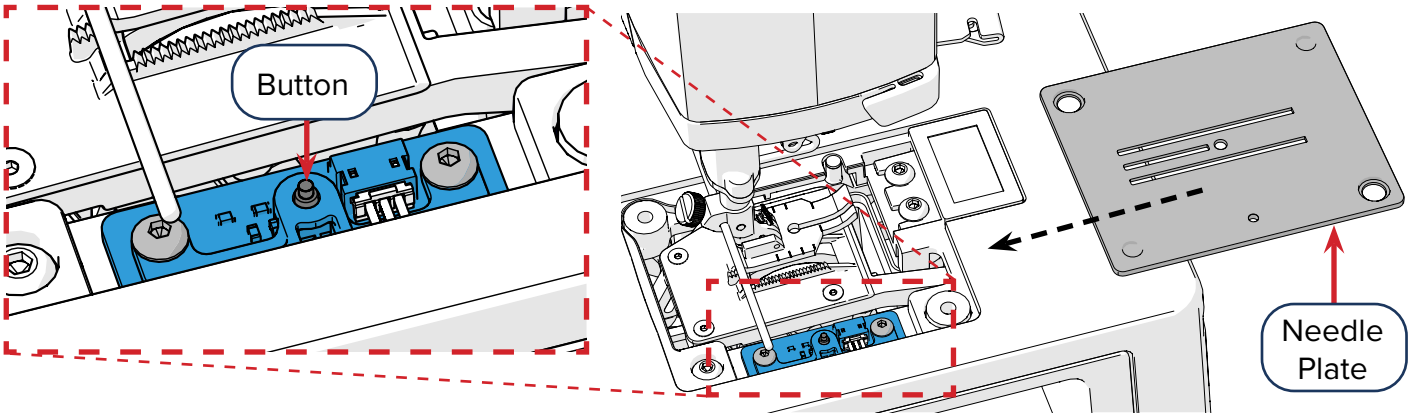

Replace the Needle Plate Sensor Board (continued)

12 Gently set the plate straight down into the indentation.

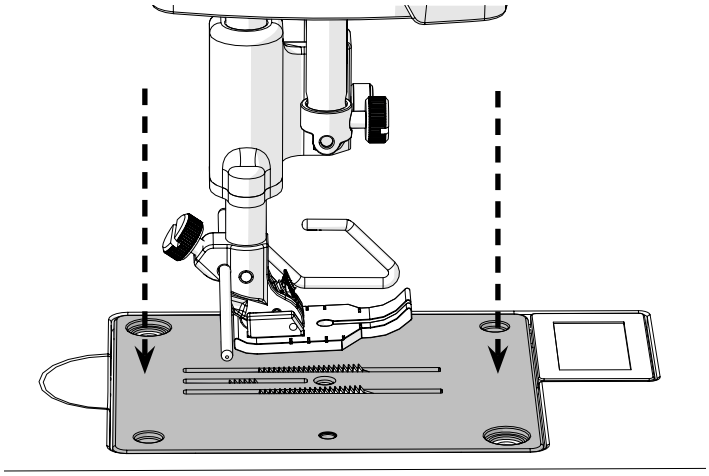

13 Insert the **needle plate screws** in the screw holes. Do not tighten.

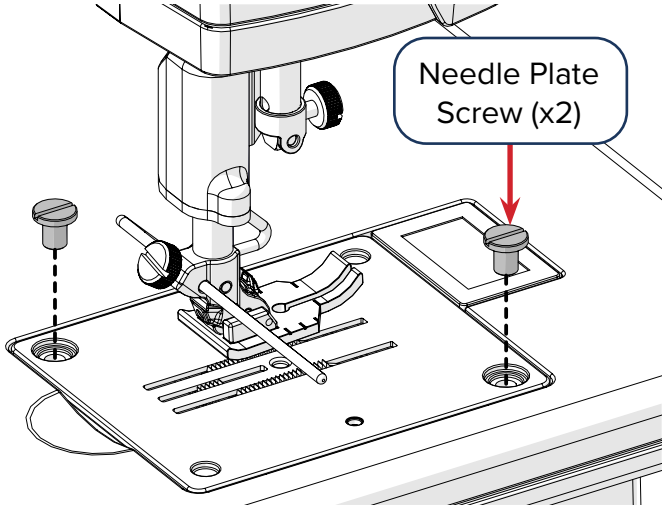

14 Insert the needle into the needle bar. Check the **sight hole** above the screw to make sure the needle is fully inserted.

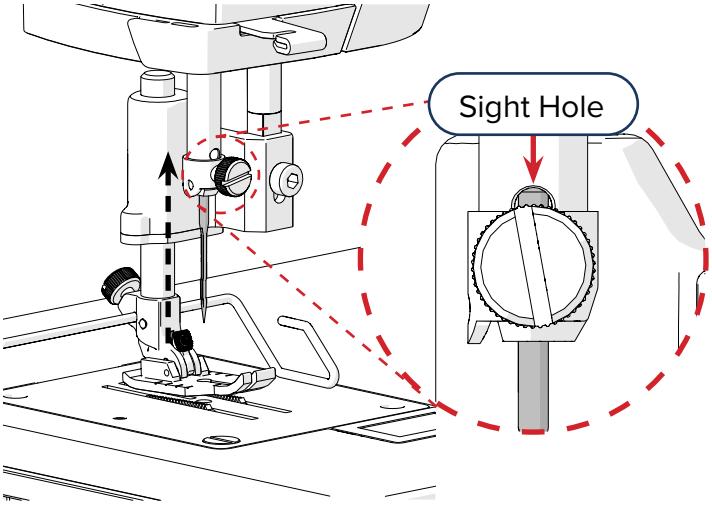

Replace the Needle Plate Sensor Board (continued)

15 Attach the **needle magnet** to the needle, opposite from the **scarf**.

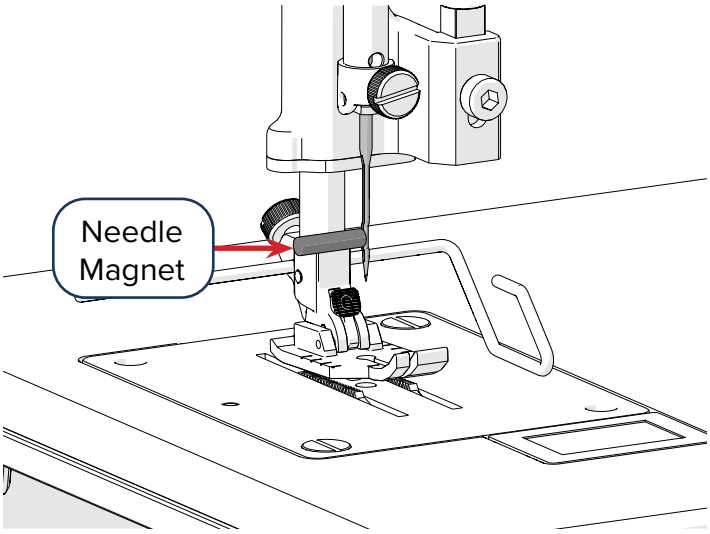

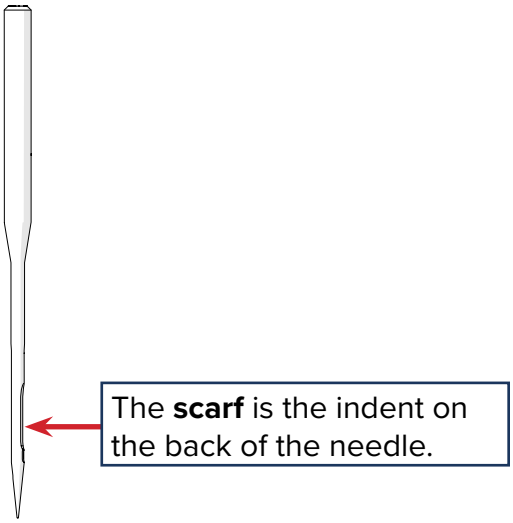

16 Turn the needle so that the magnet points as straight as possible away from the **presser bar**.
Note: Move the needle directly. Do not use the magnet to move the needle.

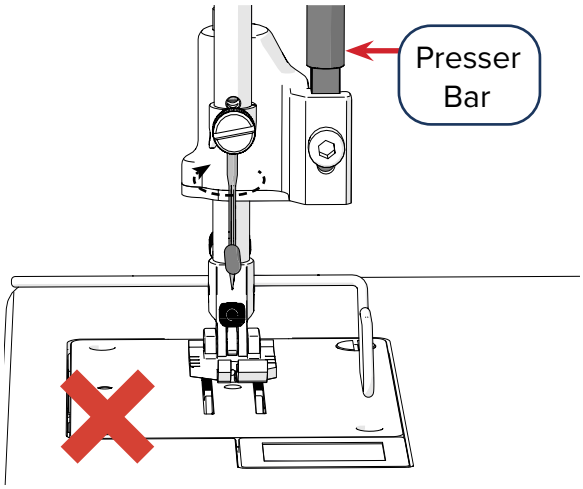

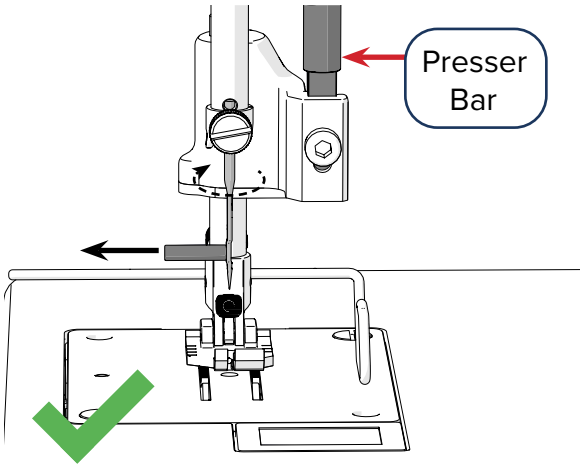

17 Tighten the **needle bar thumb screw**. Do not over-tighten if using the flat head screwdriver.

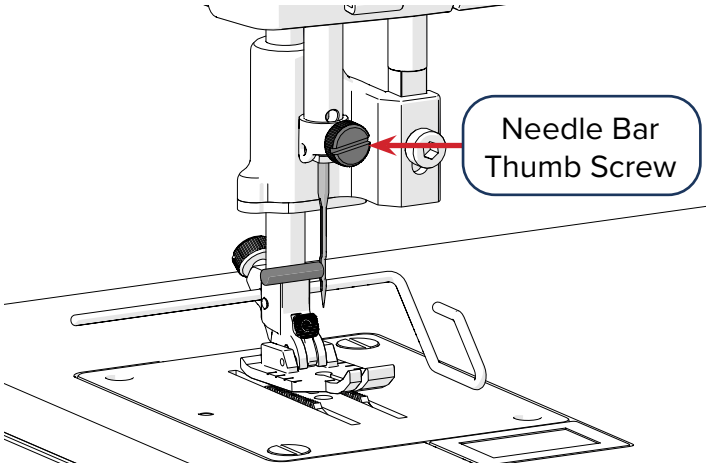

18 Remove the needle magnet.

Replace the Needle Plate Sensor Board (continued)

19 Use the hand wheel to lower the needle to its lowest position.

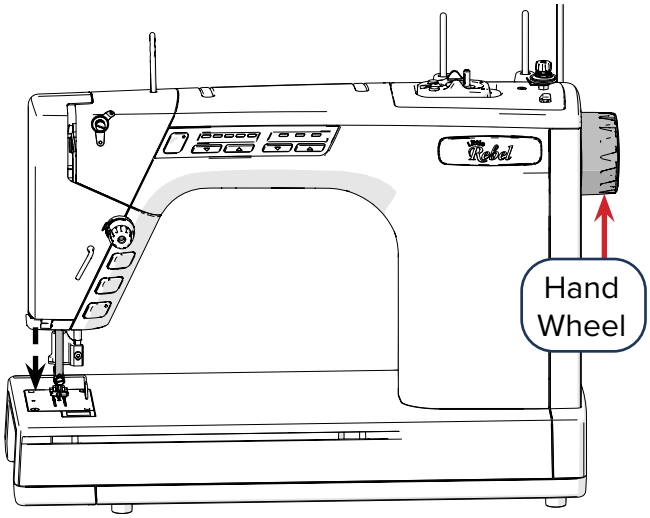

20 Adjust the position of the needle plate to center the needle in the opening.

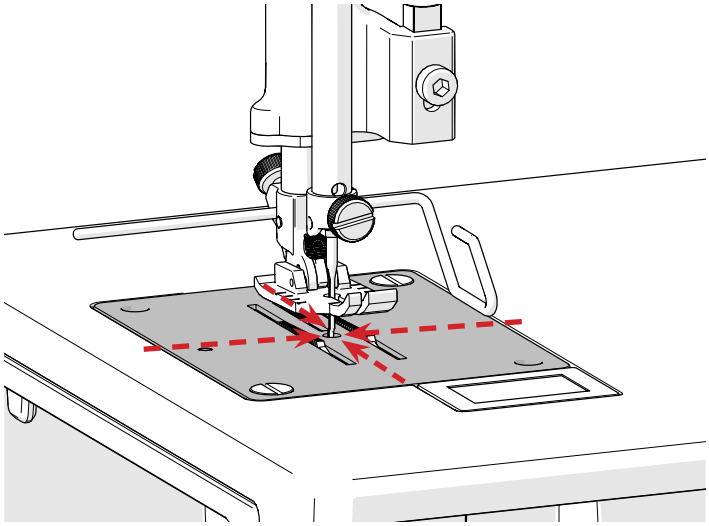

21 Tighten the needle plate screws with the flat head screwdriver till you meet resistance, then one quarter turn more.

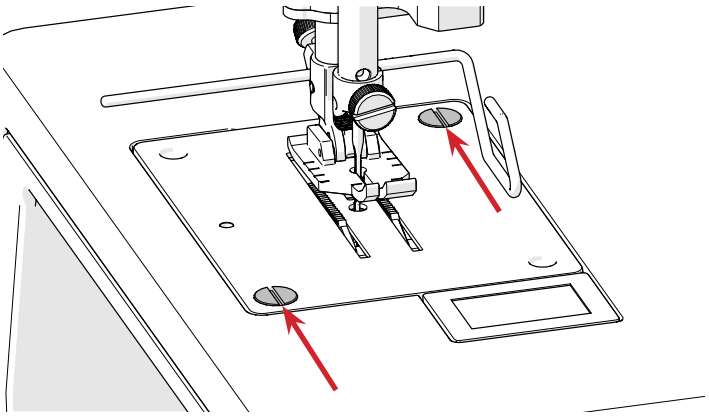

Note: If the hopping foot is installed, you must reset the foot height after reinstalling the needle plate.

Note: If the sensor doesn't seem to work correctly, double-check the cable was plugged in correctly.

22 **Task Result:** The needle plate sensor board is replaced.

Replace the Fabric Sensor

Parts & Tools Needed:

Fabric Sensor Assembly SM13

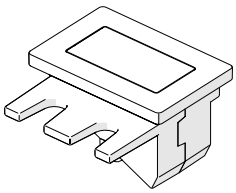

SMP-09-17615

Needle Magnet

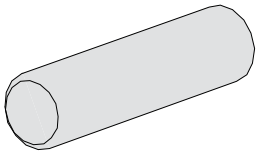

Flathead Screwdriver

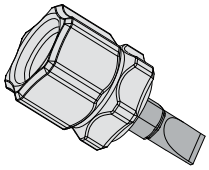

SMP-03-10169

Allen Wrench 2.5 mm

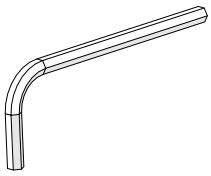

Note: The T-handle Allen wrench that came with your machine is not recommended for this procedure because it is too bulky.

Instructions

Take the following steps replace the fabric sensor:

1. **CAUTION:** For your safety, always power off and unplug your machine prior to removing or reinstalling electrical parts.

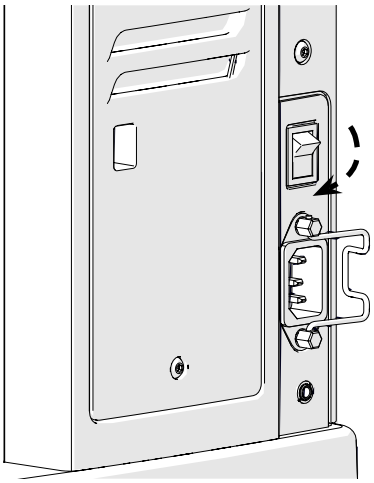

2 Rotate the **hand wheel** until the **needle** is in the highest position.

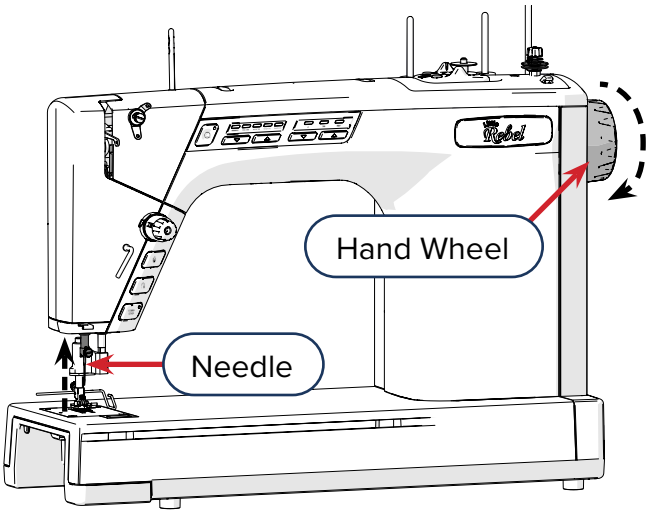

3 Loosen the **needle bar thumb screw** and pull out the needle. If needed, use the flat head screwdriver to loosen the screw.

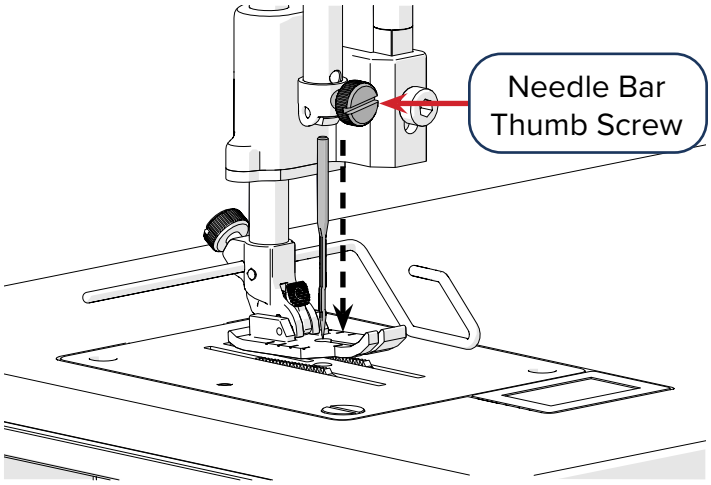

4 The presser bar lever has two positions: **low** and **high**. Lift the presser bar lever to the high position.

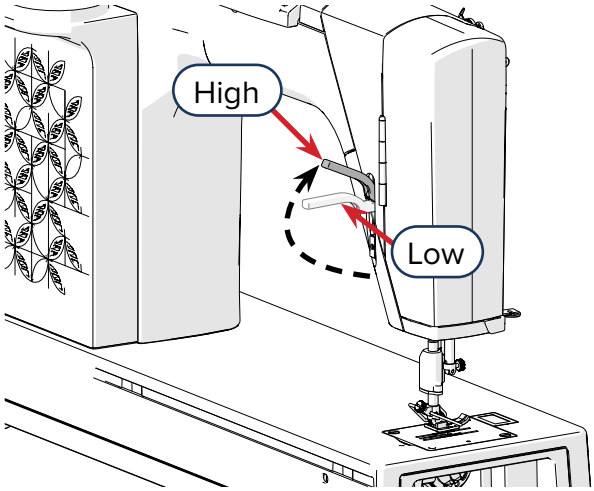

Replace the Fabric Sensor (continued)

5 Use a flathead screwdriver to remove the two **needle plate screws** from the needle plate.

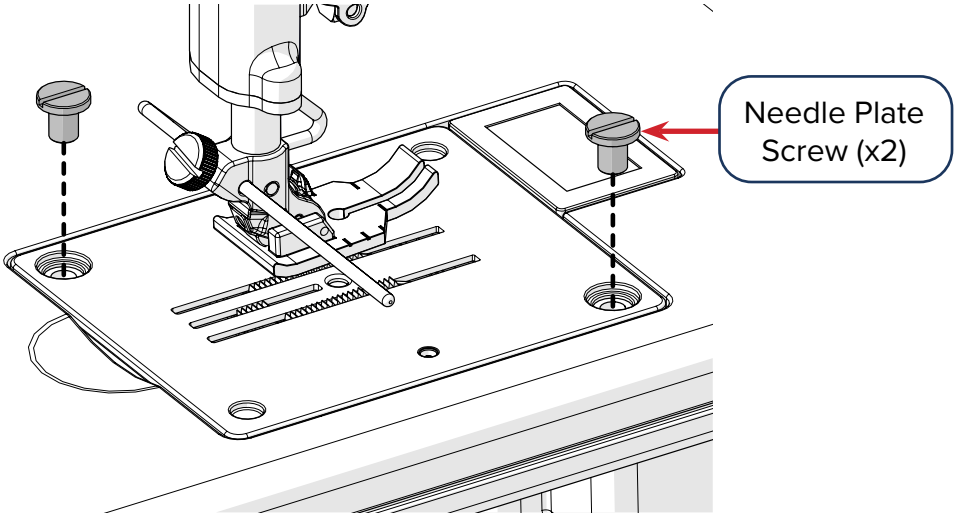

6 Carefully lift the **needle plate** and pull it away from the machine. **IMPORTANT:** There is a **button** underneath the needle plate that can be damaged if too much force is applied to it from the side, so take care that the needle plate doesn't catch on or bang into this button.

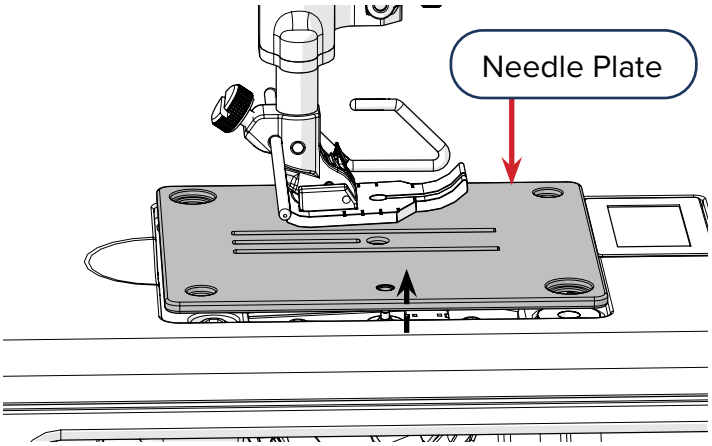

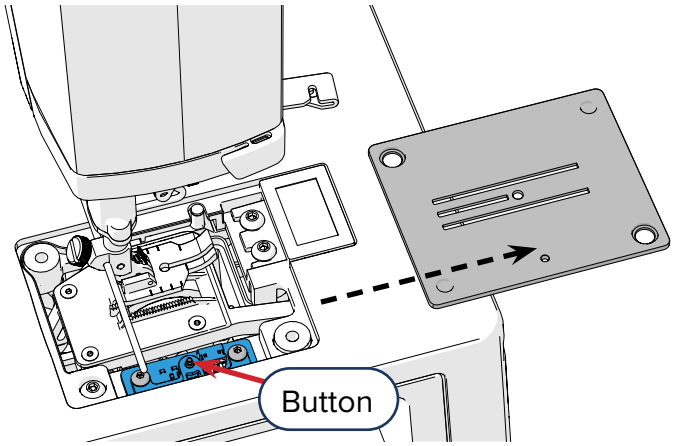

7 Unscrew the two **M4 x 10 mm SBHCS** holding the sensor with a 2.5 mm Allen wrench.

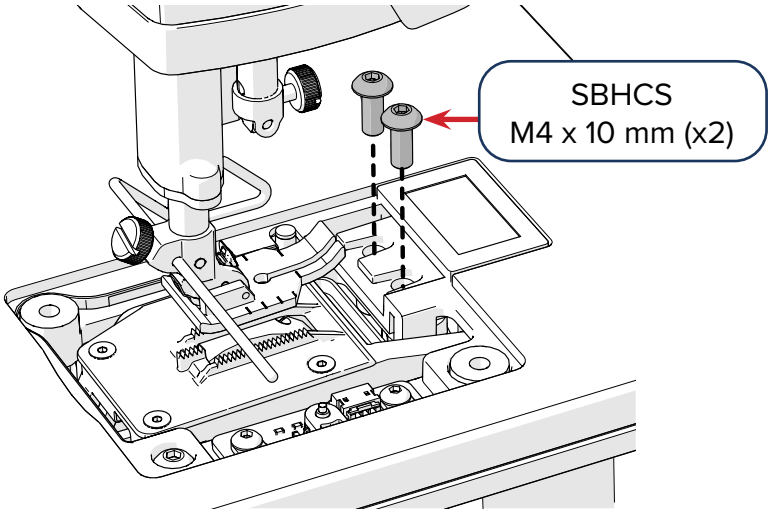

8 Slide the **old fabric sensor assembly** in toward the presser foot and then carefully lift it up.

IMPORTANT: Lift the sensor carefully; it is attached to the machine with a cable.

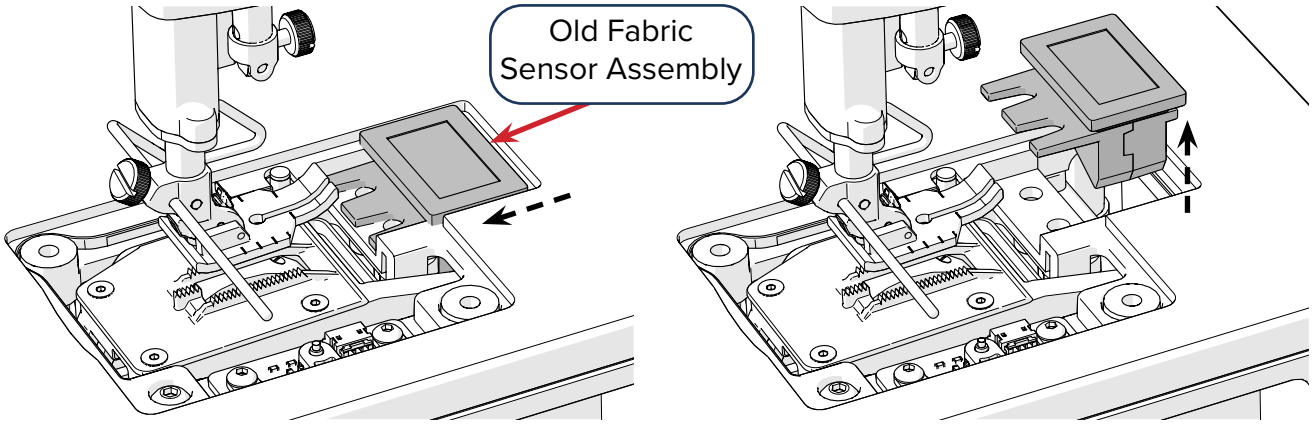

9 The **cable** is held in place by a **latch**. Slide a pin between the latch and the **port**, and then pull the pin away from the port to open the latch. The cable should pull away freely.

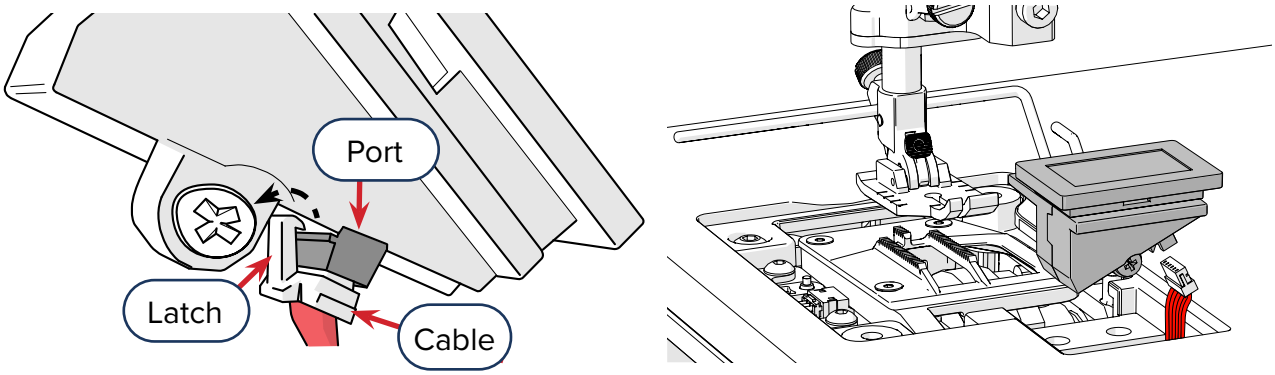

CAUTION: Do not pull directly on the cords. Open the latch first.

10 Plug the **new fabric sensor** into the machine. Align the end of the cable with the plug carefully before plugging it in.

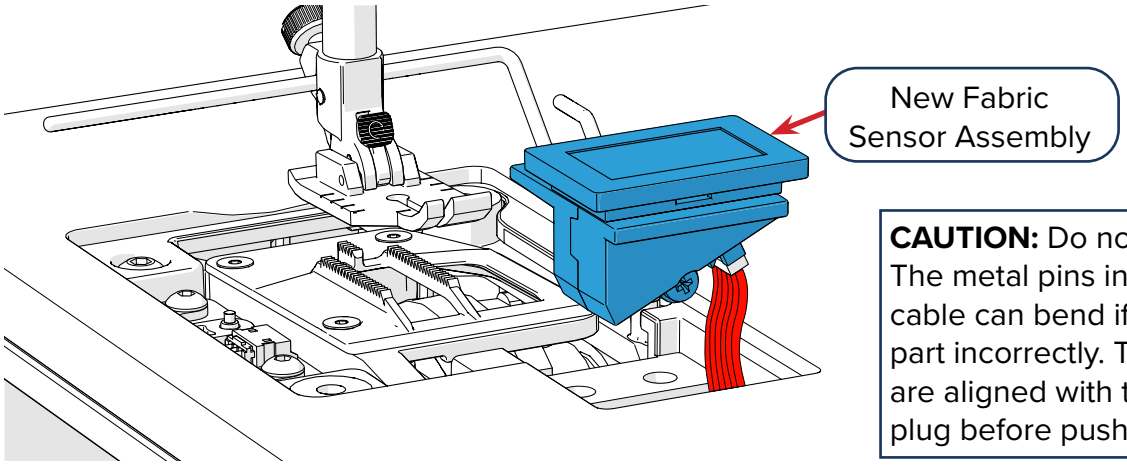

CAUTION: Do not force the cable. The metal pins in the end of the cable can bend if pushed into the part incorrectly. Take care the pins are aligned with the slots in the plug before pushing the cable in.

Replace the Fabric Sensor (continued)

11 Place the sensor down and then slide it away from the presser foot to align the screw holes in the sensor with those in the machine.

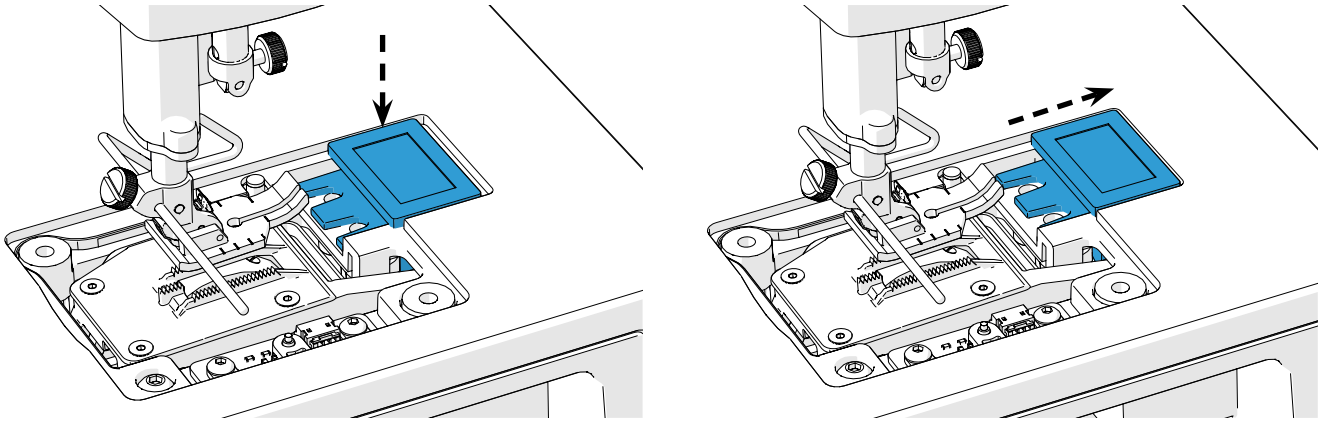

12 Secure the sensor to the machine with the two **M4 x 10 mm SBHCS** and 2.5 mm Allen wrench.

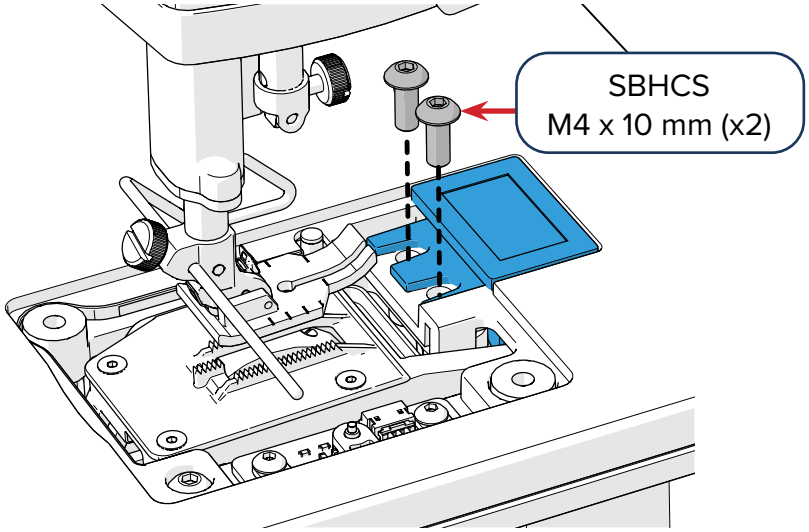

13 Carefully slide the needle plate onto the machine. **IMPORTANT:** Take care that the plate does not bang into or catch on the **button** that pokes up from the needle sensor board. The button can break if it is hit with too much force from the side.

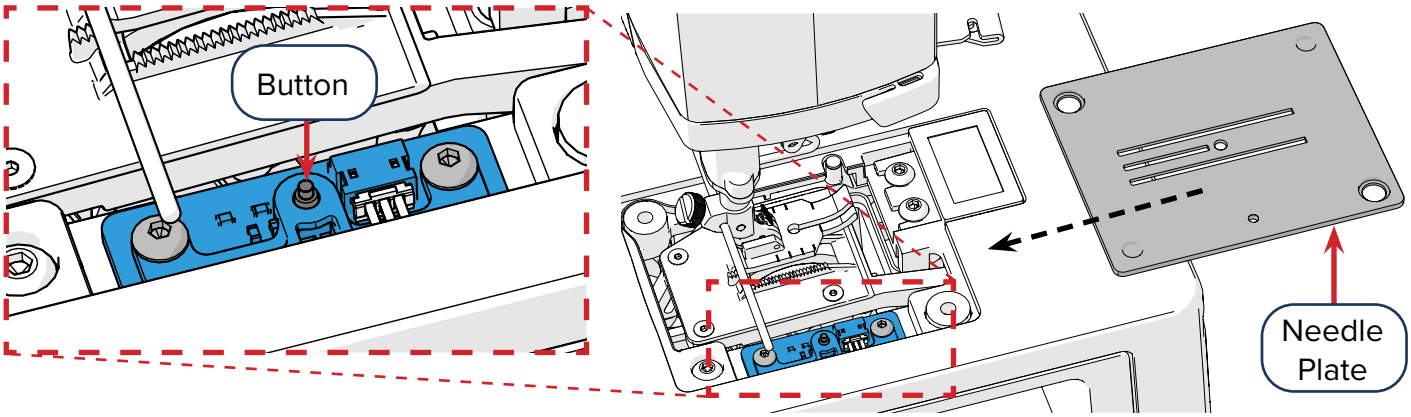

14 Gently set the plate straight down into the indentation.

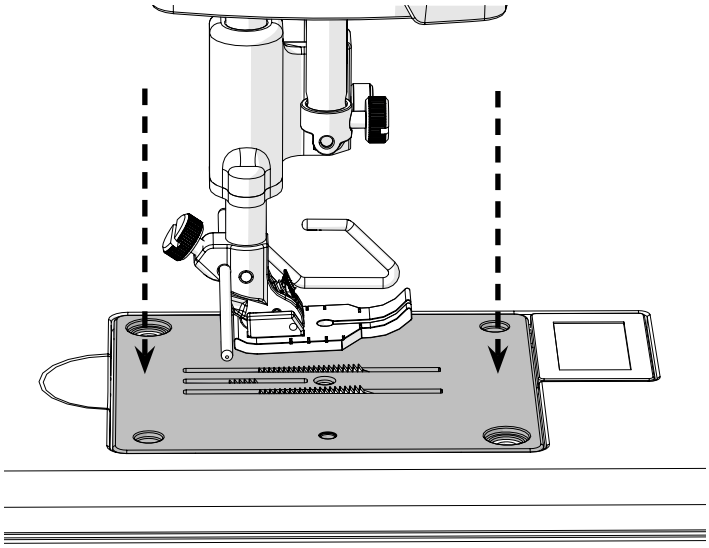

15 Insert the **needle plate screws** in the screw holes. Do not tighten.

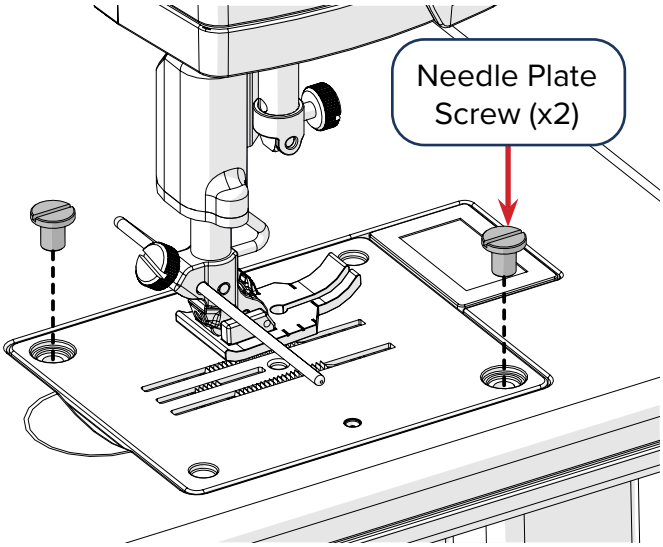

16 Insert the needle into the needle bar. Check the **sight hole** above the screw to make sure the needle is fully inserted.

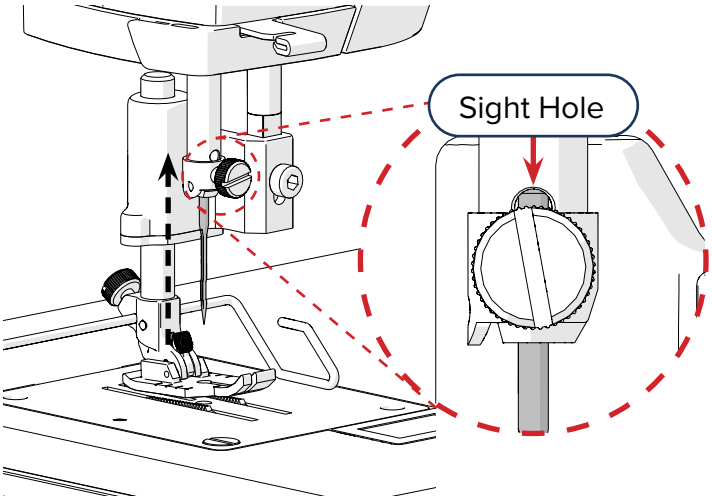

Replace the Fabric Sensor (continued)

17 Attach the **needle magnet** to the needle, opposite from the **scarf**.

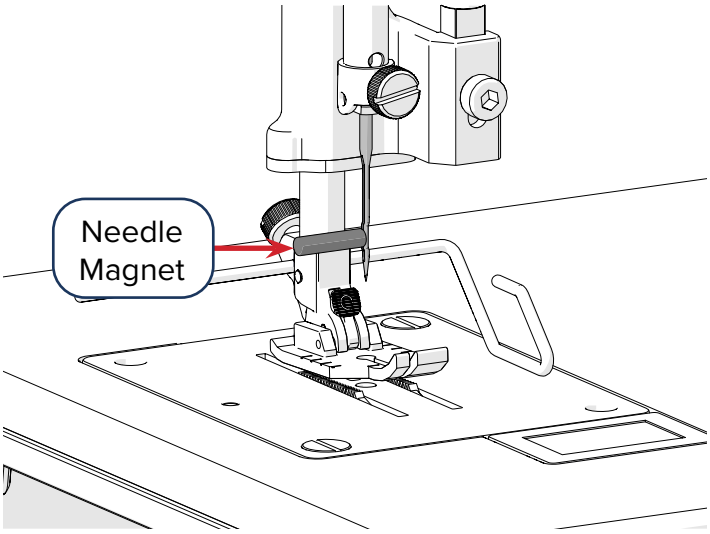

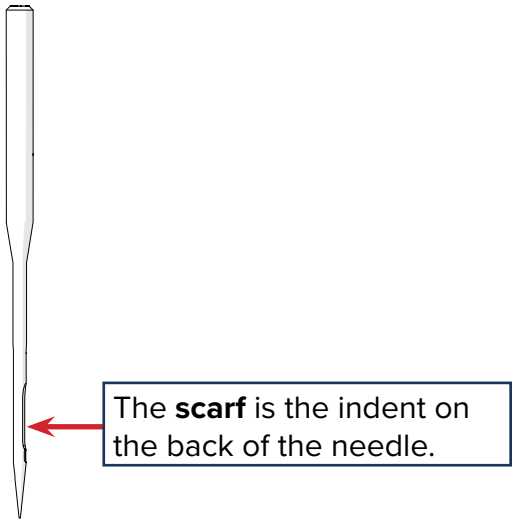

18 Turn the needle so that the magnet points as straight as possible away from the **presser bar**.
Note: Move the needle directly. Do not use the magnet to move the needle.

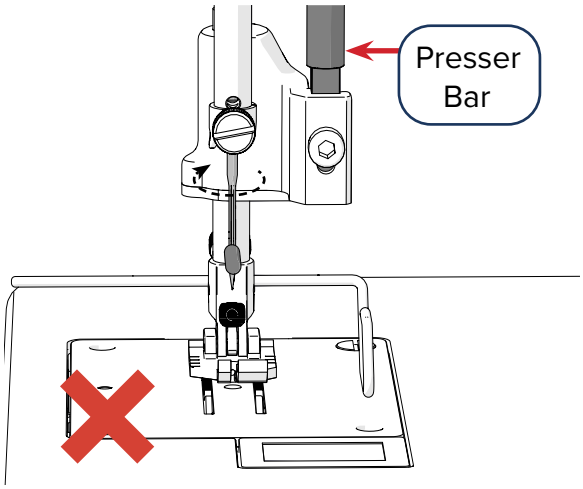

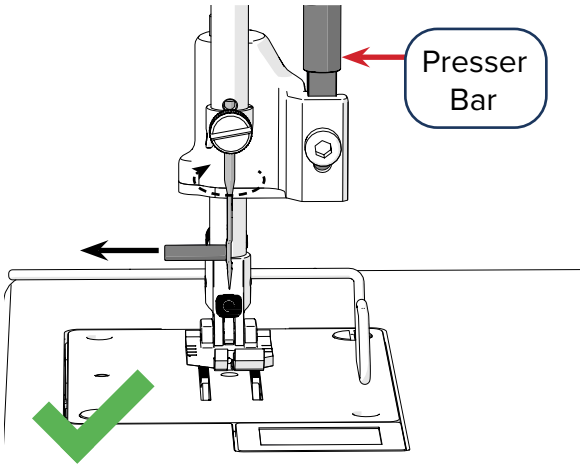

19 Tighten the **needle bar thumb screw**. Do not over-tighten if using the flat head screwdriver.

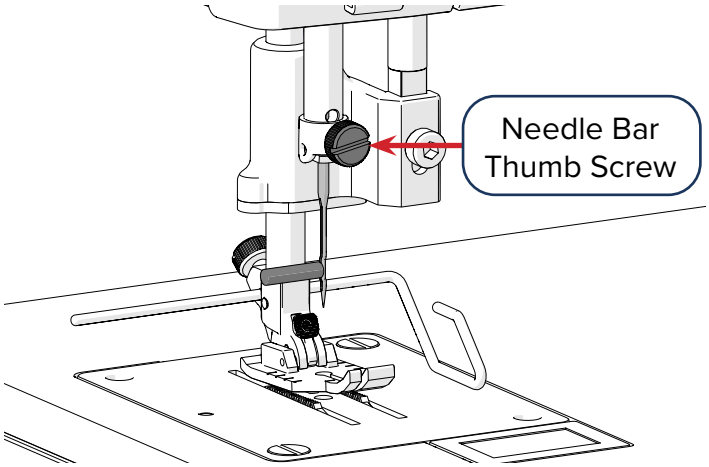

20 Remove the needle magnet.

21 Use the hand wheel to lower the needle to its lowest position.

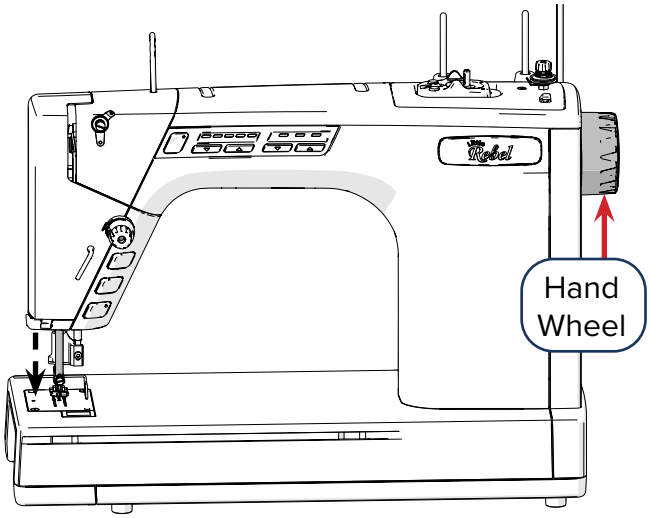

22 Adjust the position of the needle plate to center the needle in the opening.

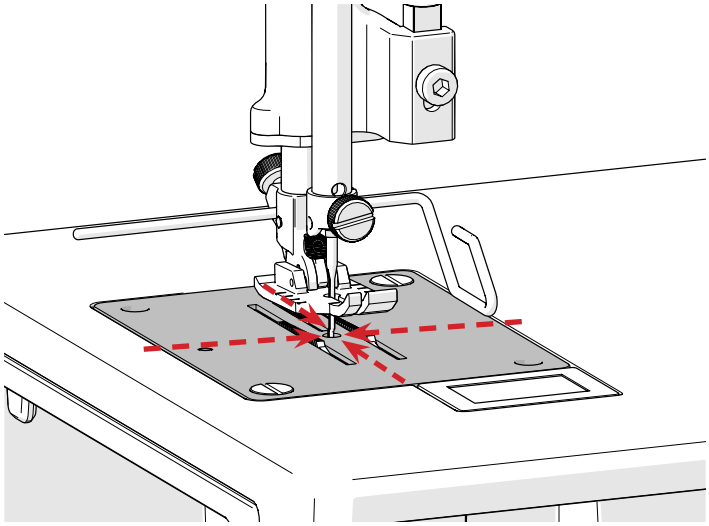

23 Tighten the needle plate screws with the flat head screwdriver till you meet resistance, then one quarter turn more.

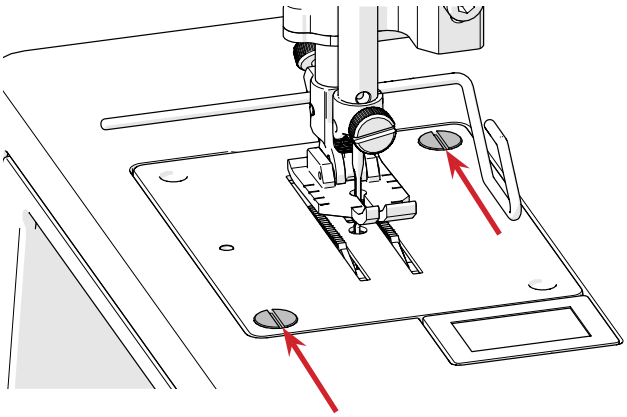

Note: If the hopping foot is installed, you must reset the foot height after reinstalling the needle plate.

Note: If the sensor doesn't seem to work correctly, double-check the cable was plugged in correctly.

24 **Task Result:** The fabric sensor assembly is replaced.

Replace the Large Thread Tensioner

Parts & Tools Needed:

Thread Tensioner Assembly

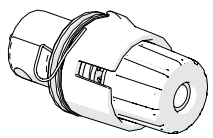

SMP-09-17646

T-handle Allen Wrench 2 mm

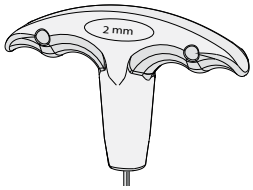

HDW-03-13116

Long Flathead Screwdriver

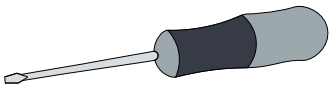

Instructions

Take the following steps replace the large thread tensioner:

1. **CAUTION:** For your safety, always power off and unplug your machine before opening the machine.

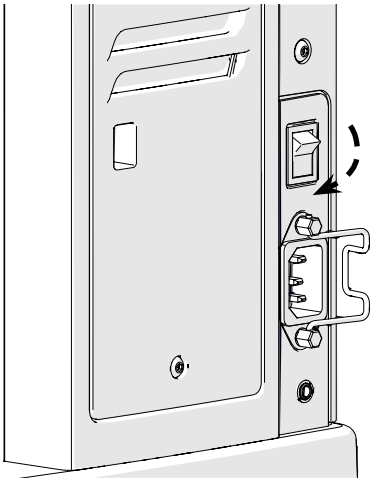

2. Make sure the **presser bar lever** is lowered. Open the front plastic cover.

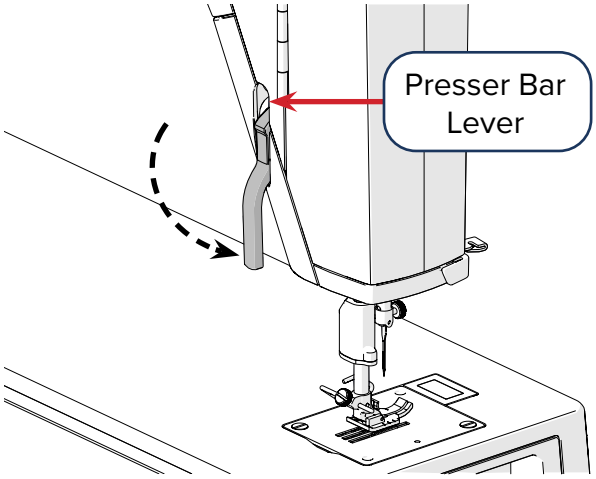

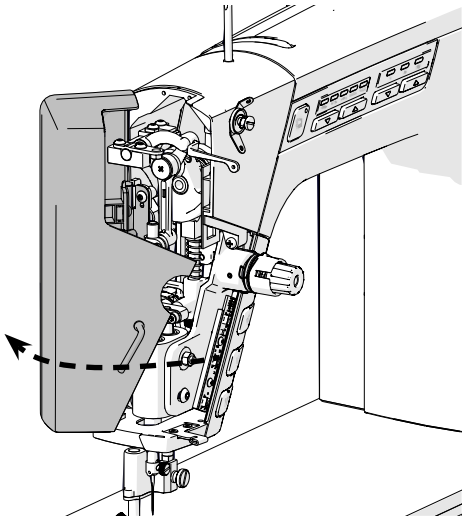

Replace the Large Thread Tensioner (continued)

3 *Loosen* (but do not remove) the **set screw** on the side of the tensioner using a 2 mm Allen wrench.

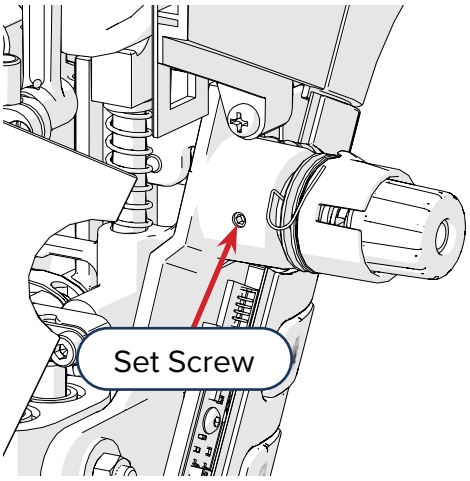

4 Pull out the large thread tensioner.

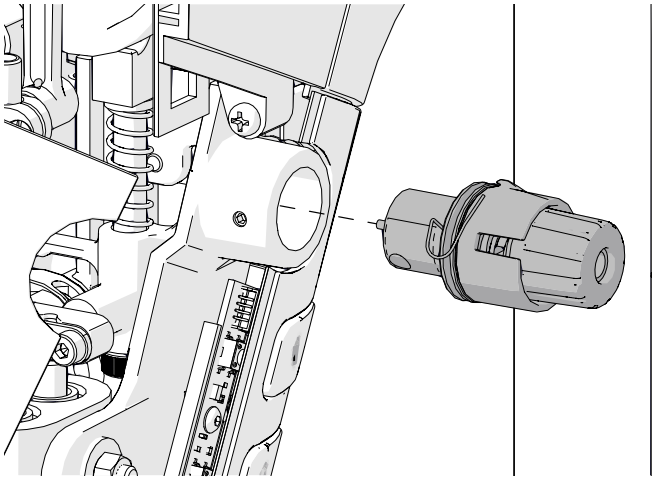

5 Insert the **new large thread tensioner** with the **check spring** at a **45 degree angle** to the ground.

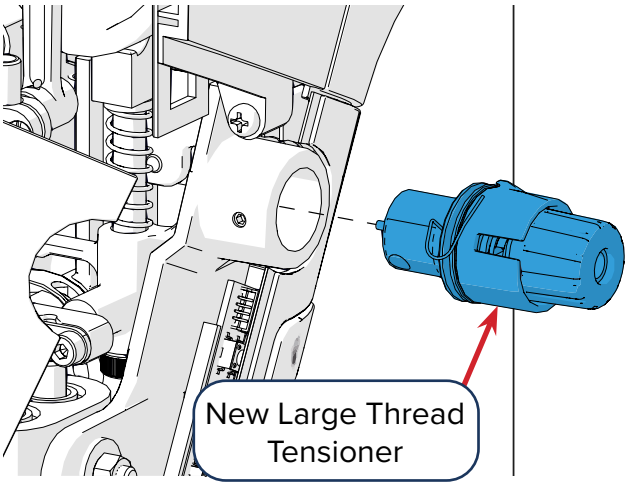

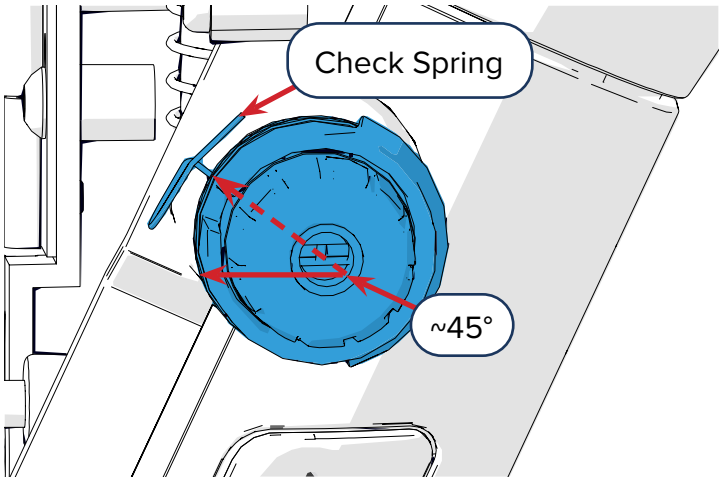

Replace the Large Thread Tensioner (continued)

6 Fully tighten the **set screw** with the 2 mm Allen wrench so the thread tensioner is firmly held in place.

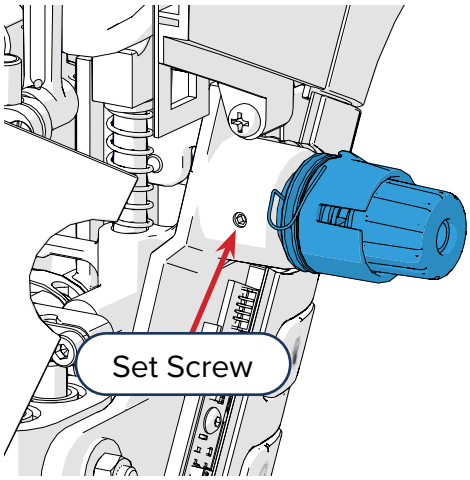

7 Insert a **flathead screwdriver** into the slot on the inside of the tensioner knob. Turn counterclockwise. The thread tensioner rotates. Turn until the **check spring** also begins to move and then stop. This ensures the check spring is at a good starting position for tensioning.

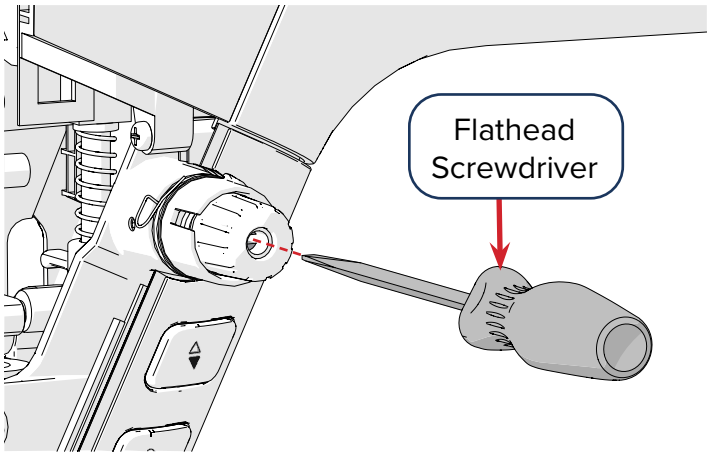

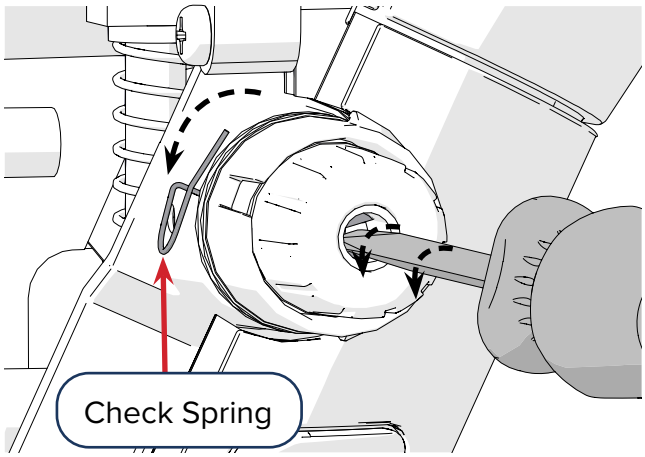

8 Reverse directions to turn the screwdriver clockwise until the check spring stops at the original position. Then continue to turn the screwdriver clockwise another 90 degrees and stop. This tensions the check spring.

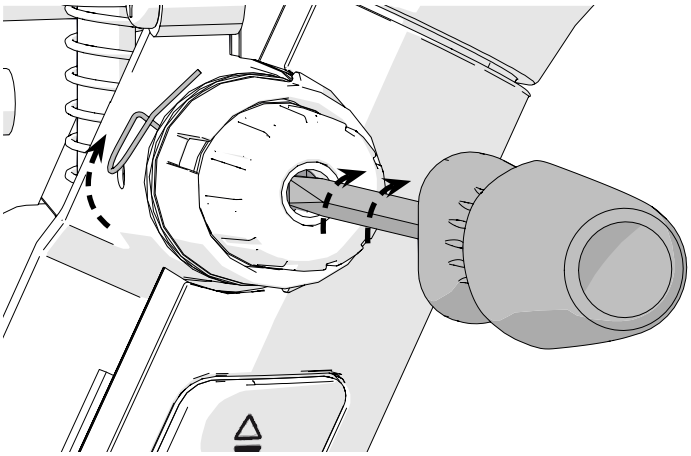

Replace the Large Thread Tensioner (continued)

9 Close the front cover.

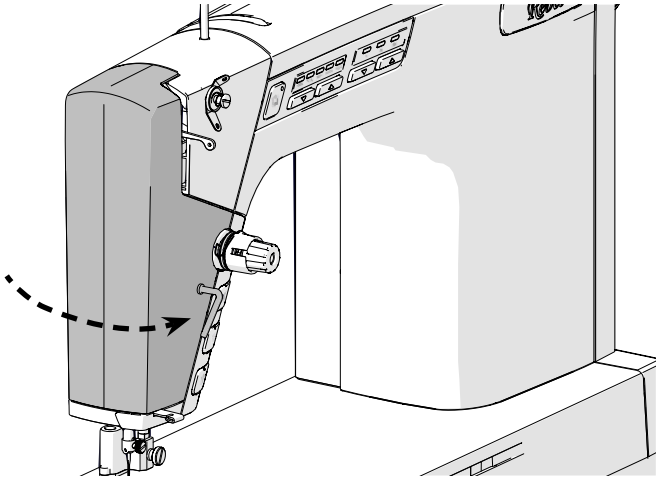

10 **Task Result:** The large thread tensioner is replaced and tensioned correctly.

Information on the disposal for Waste Electrical & Electronic Equipment (WEEE): This symbol on the products and accompanying documents means that used electrical and electronic products should not be mixed with general household waste.

For proper disposal for treatment, recovery, and recycling, please take these products to designated collection points where they will be accepted on a free-of-charge basis.

In some countries you may be able to return your products to your local retailer upon the purchase of a new product.

Disposing of this product correctly will help you save valuable resources and prevent any possible effects on human health and the environment, which could otherwise arise from inappropriate waste handling. Please contact your local authority for further details of your nearest collection point for WEEE.

Grace
COMPANY

www.graceframe.com
1-801-485-6688